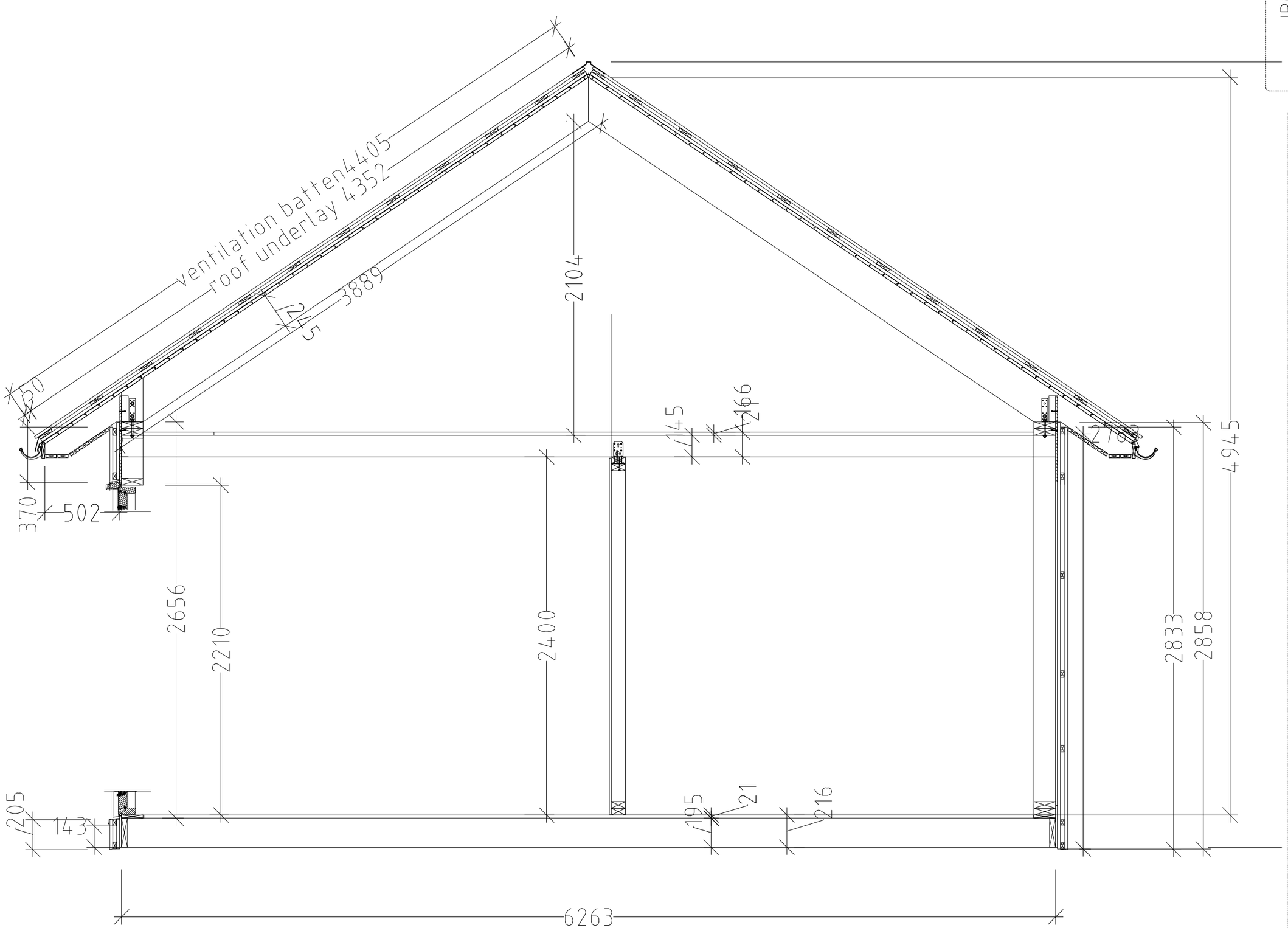

IP0

SECTION VIEW

08.07.2022

M 1:16

ID:000-2018; project:Klettar 80m2; designer: M.K ;Drawer: M.K

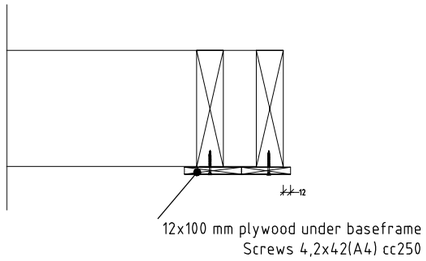

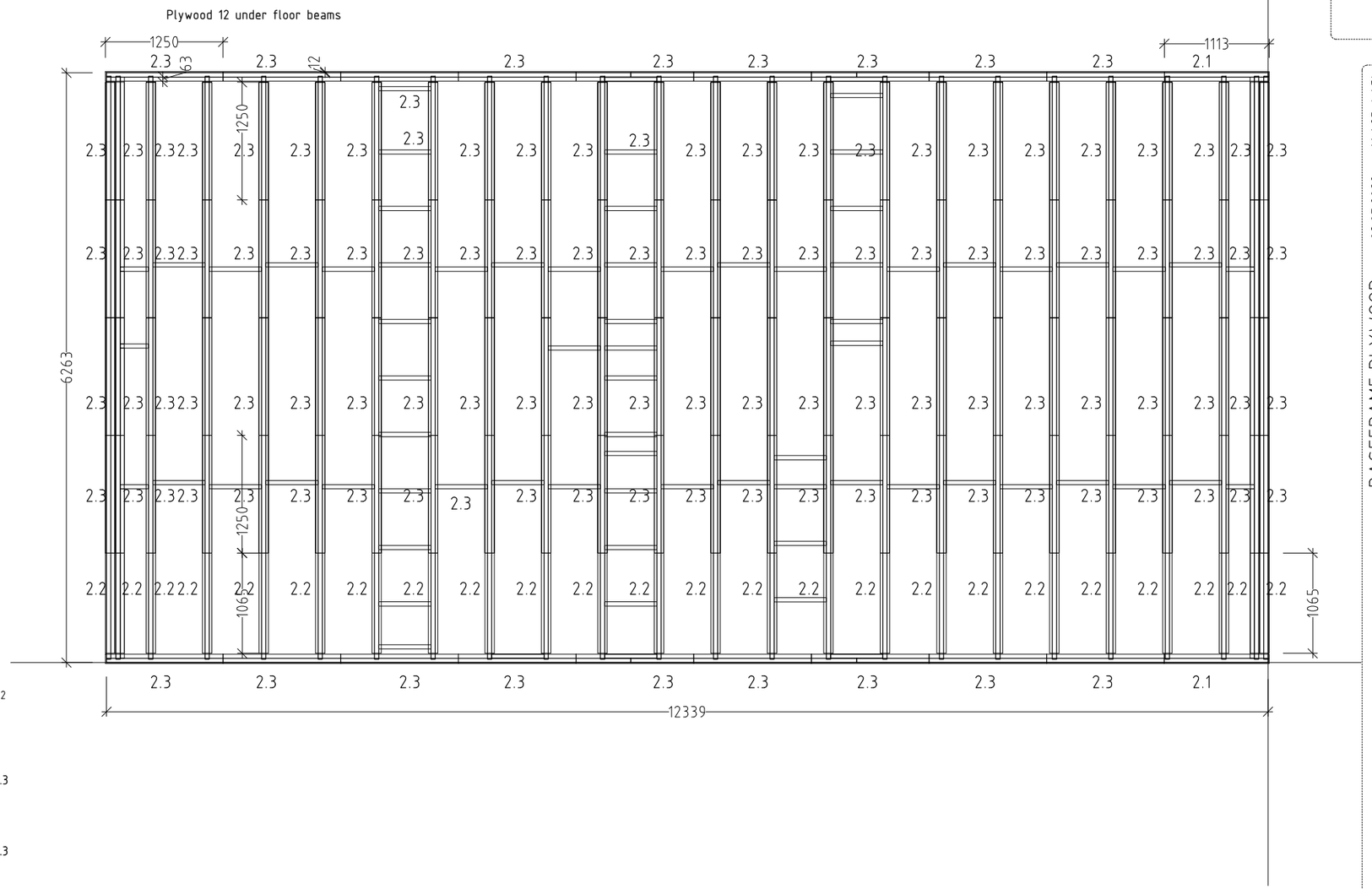

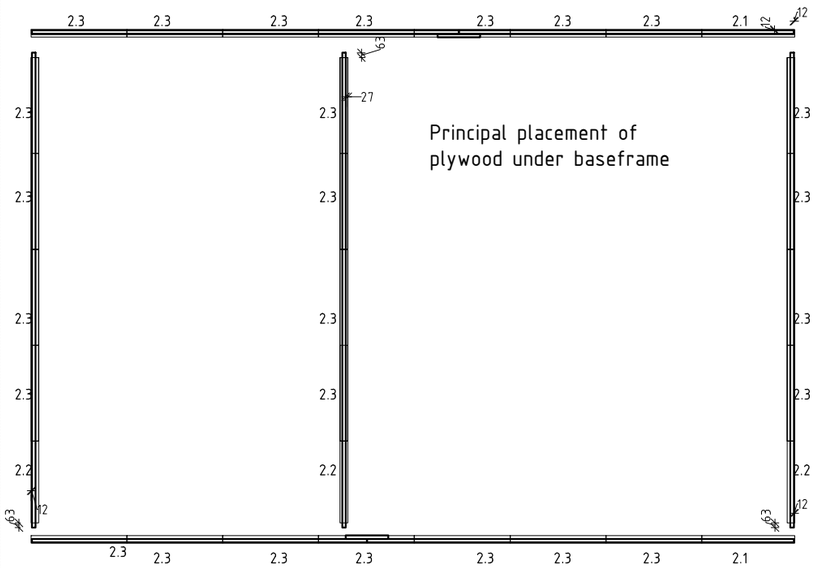

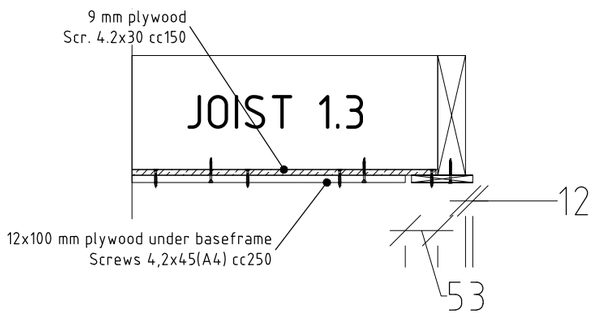

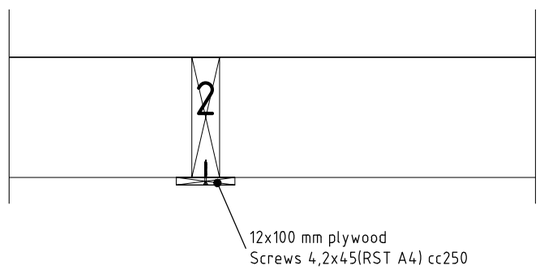

Notes:

1. Follow appropriate detail drawings to fasten elements.
2. Fix plywood under paseframe beams befor assembeling baseframe.
3. Installation plans and fastening materials are recommended by factory and are not mandatory.
3. Factory is not responsible for this project statics and stability.

IP100

BASEFRAME PLYWOOD

08.07.2022 M 1:25 / A3L

designer: M.K ;Drawer: M.K

ID:000-2018; project:Klettar 80m2;

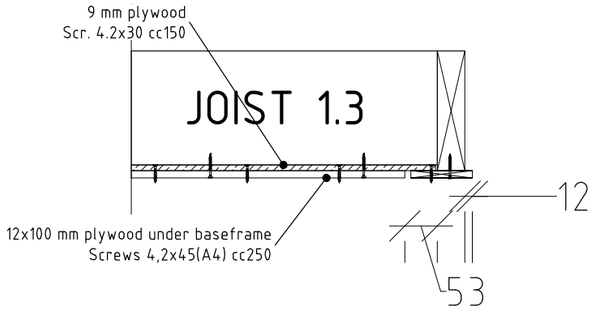

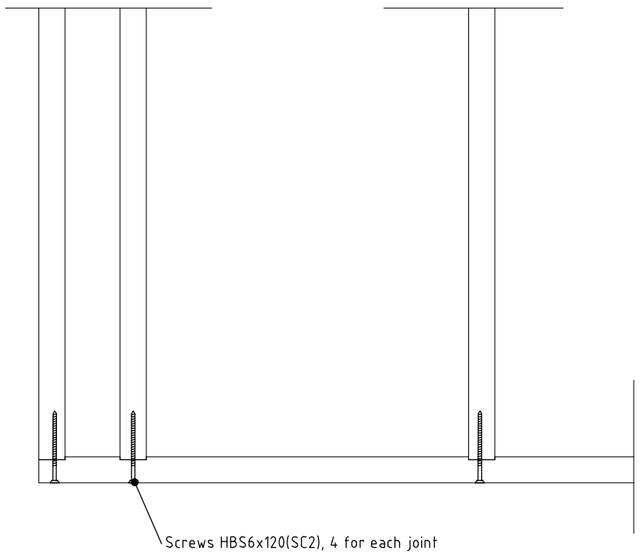

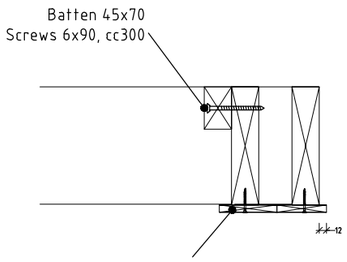

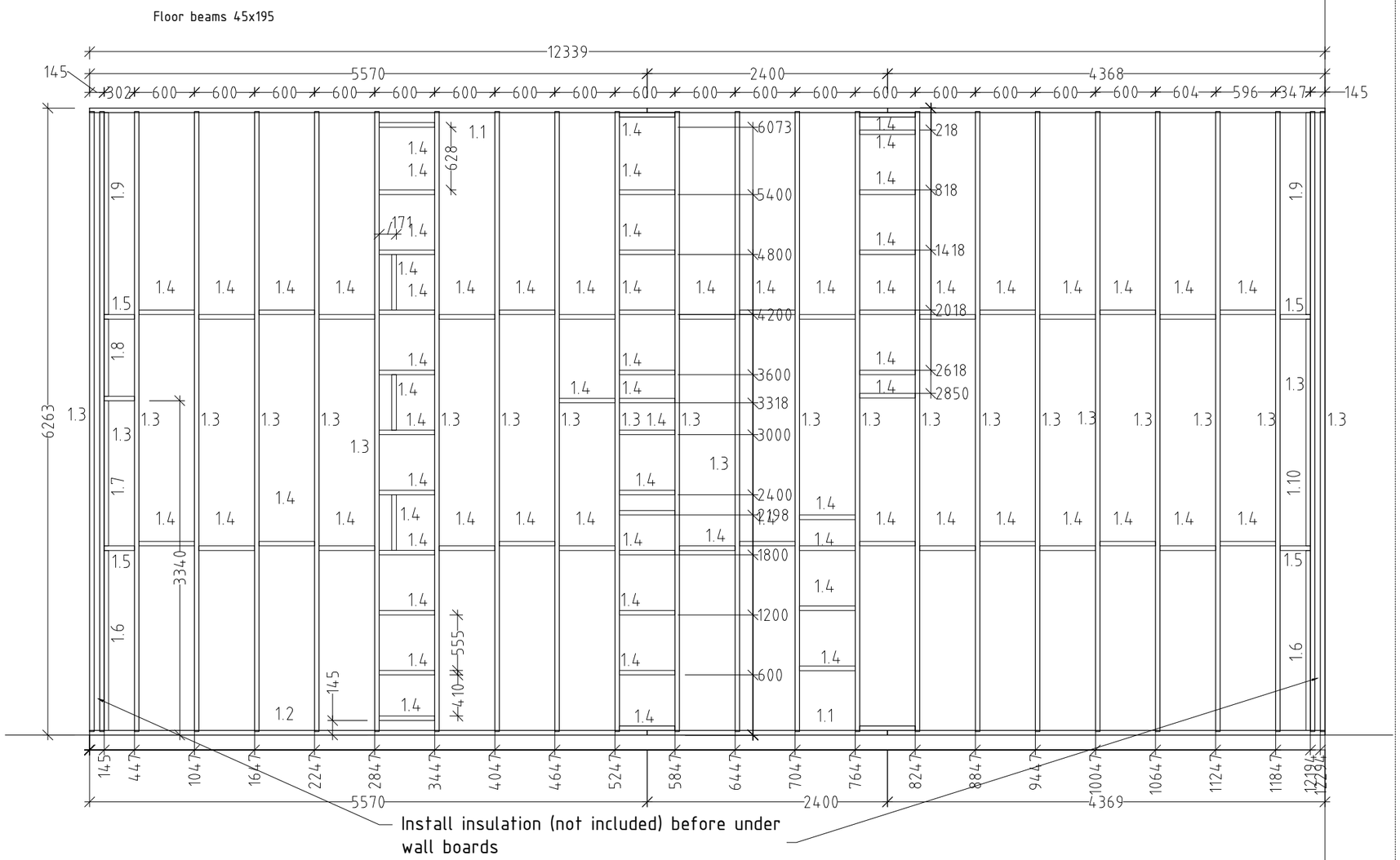

Notes:

1. Follow appropriate detail drawings to fasten elements.
2. Installation plans and fastening materials are recommended by factory and are not mandatory.
3. Factory is not responsible for this project statics and stability.

IP101

BASEFRAME

08.07.2022 M 1:25 / A3L

ID:000-2018; project:Klettar 80m2; designer: M.K ;Drawer: M.K

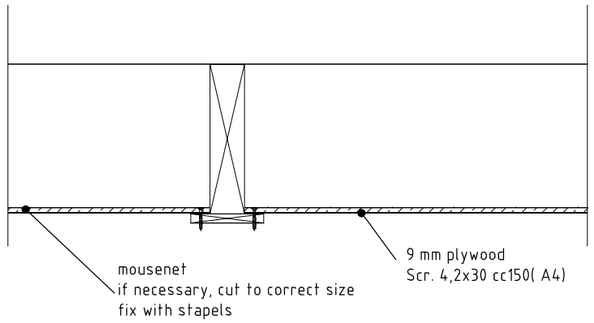

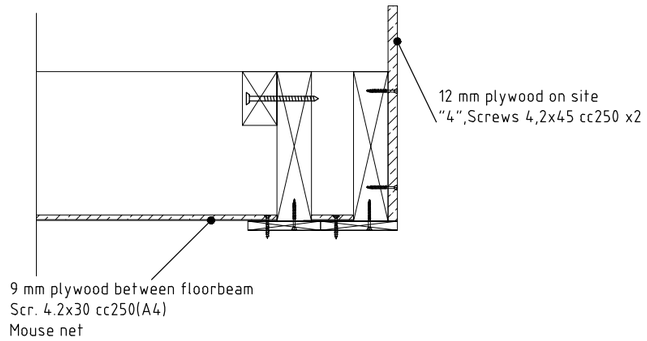

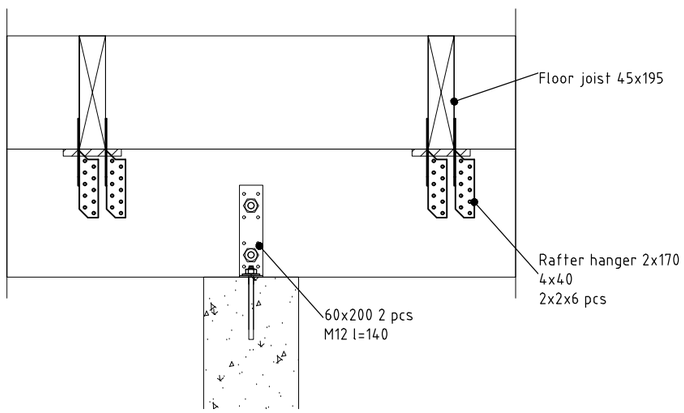

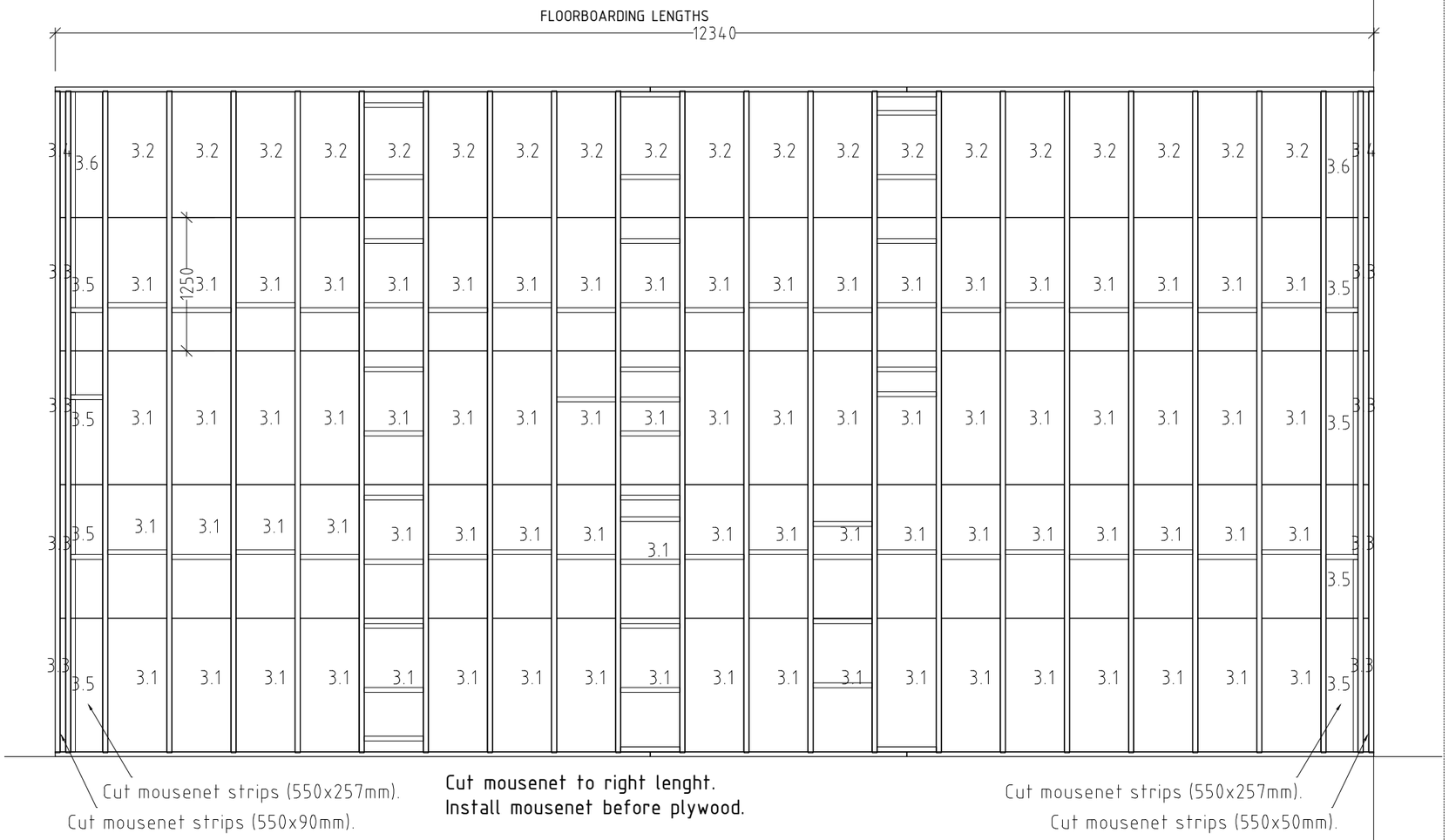

Notes:
1. Follow appropriate detail drawings to assemble the elements.
2. All dimensions are based on external surface of main timber frame.
3. Installation plans and fastening materials are recommended by factory and are not mandatory.
4. Factory is not responsible for this project statics and stability.

IP102

BASEFRAME PLYWOOD 9 mm 08.07.2022 M 1:25 / A3L

ID:000-2018; project:Klettar 80m2; designer: M.K ;Drawer: M.K

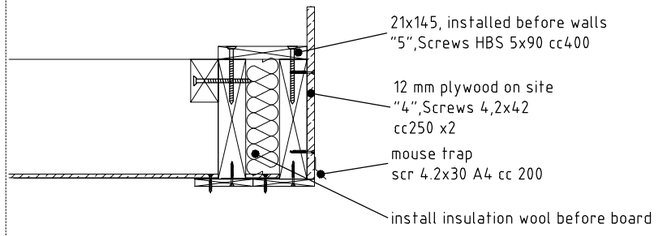

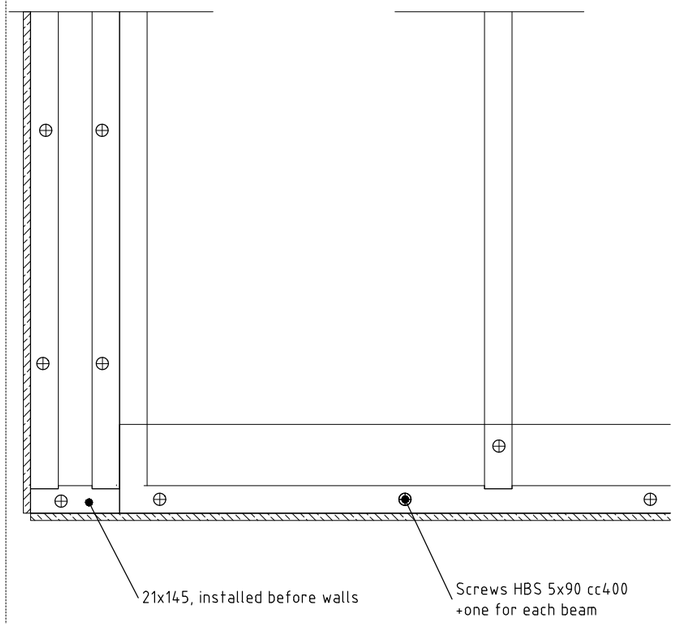

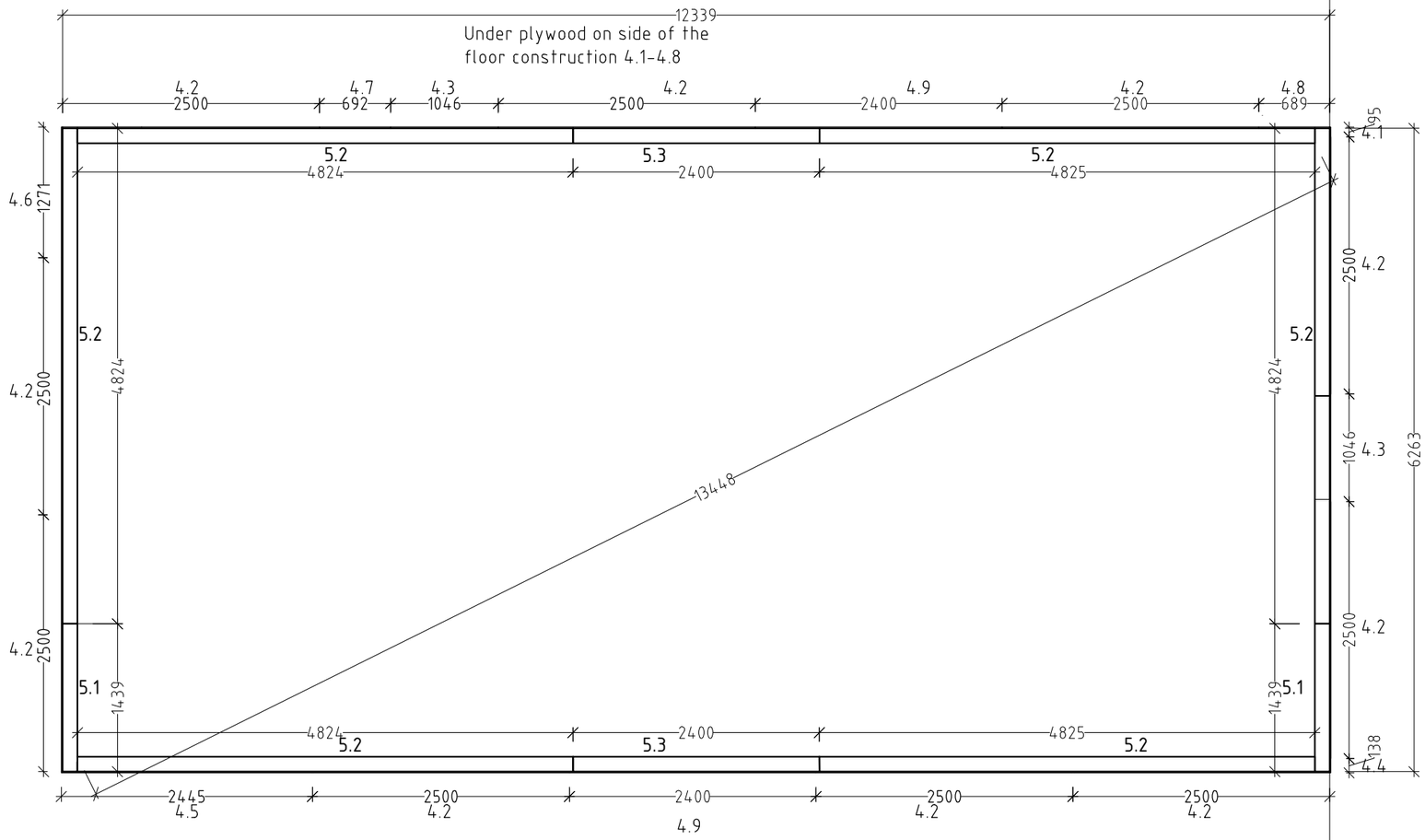

Under Wall floor board
21x145
5,1-5,2

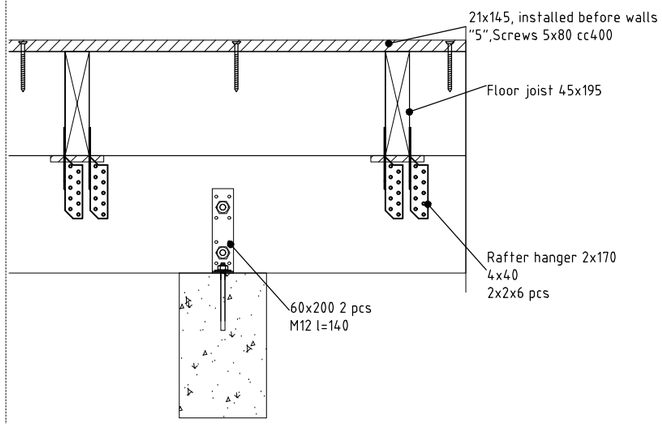

Notes:
1. Follow appropriate detail drawings to assemble the elements.
2. All dimensions are based on external surface of main timber frame.
3. Installation plans and fastening materials are recommended by factory and are not mandatory.
4. Factory is not responsible for this project statics and stability.

IP103

Under wall floor board on the beams

08.07.2022 M 1:25 / A3L

ID:000-2018; project:Klettar 80m2; designer: M.K ,Drawer: M.K

Outside wall base belt 45x145

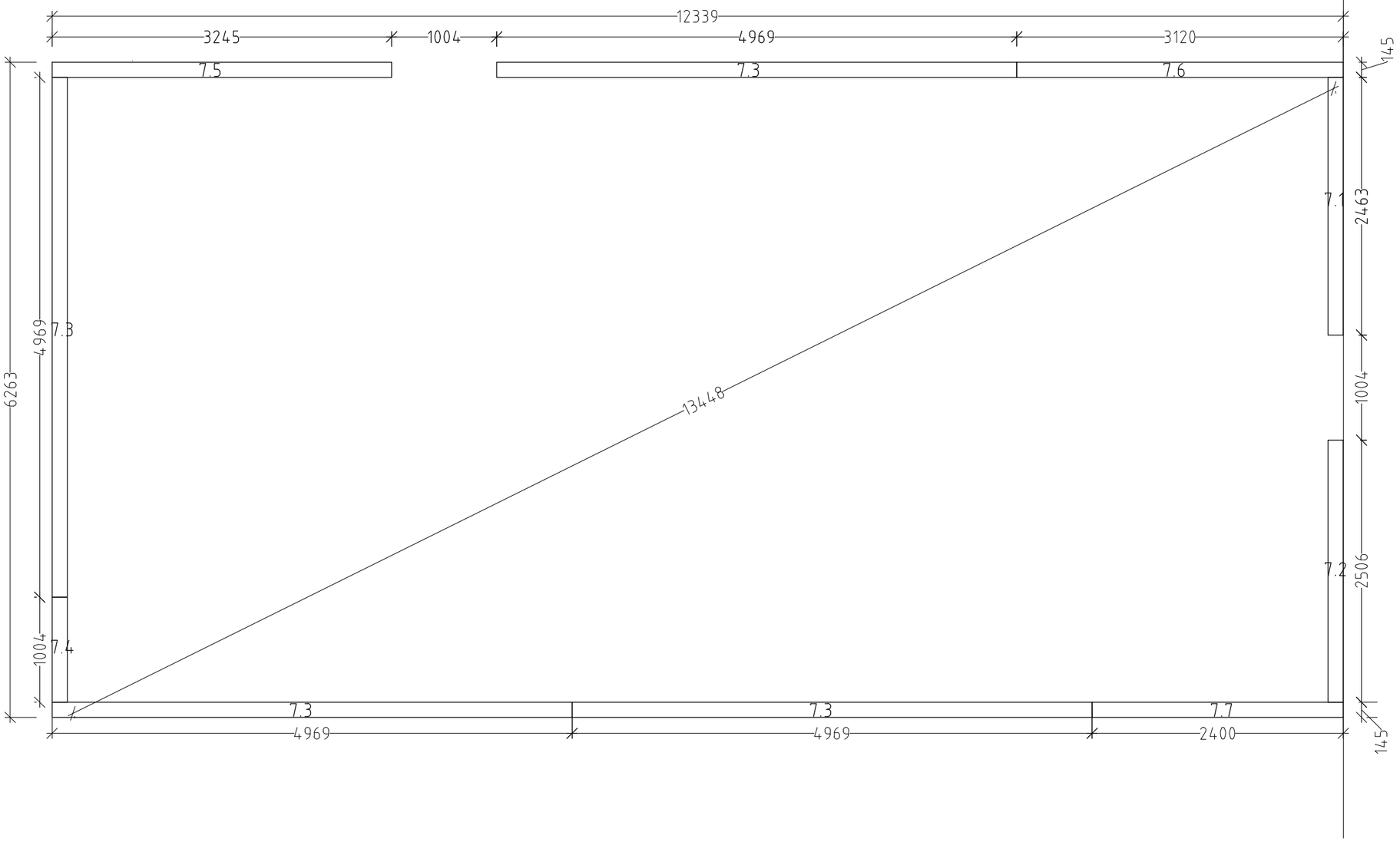

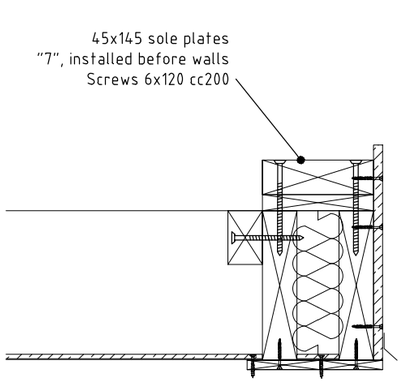

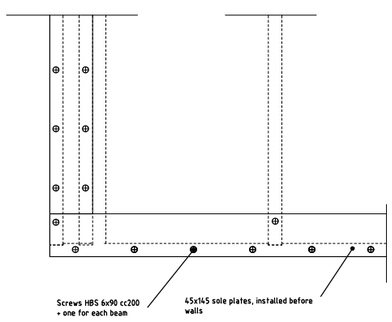

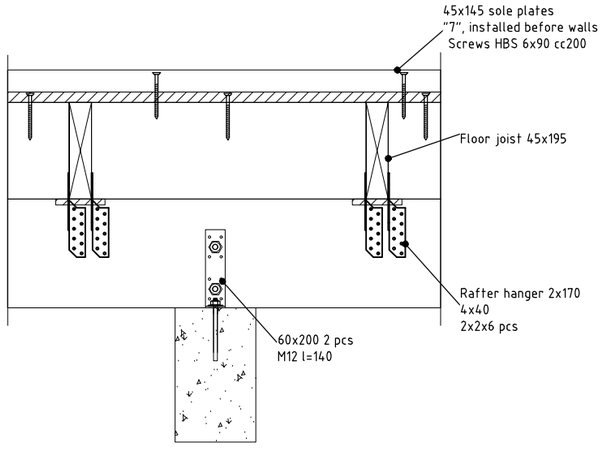

Notes:

1. Check base floor dimensions before installation of sole plate.
2. Follow appropriate detail drawings to fasten elements.
3. All external dimensions are based on external surface of main timber frame.
4. Installation plans and fastening materials are recommended by factory and are not mandatory.
5. Factory is not responsible for this project statics and stability.

IP104

GROUND FLOOR Outside wall Base belt plan

08.07.2022 M 1:25 / A3L

ID:000-2018; project:Klettar 80m2; designer: M.K ;Drawer: M.K

External wall connection
with base frame

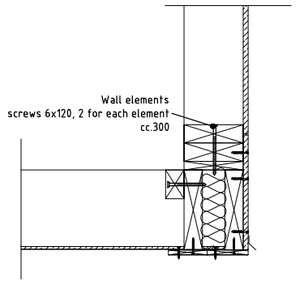

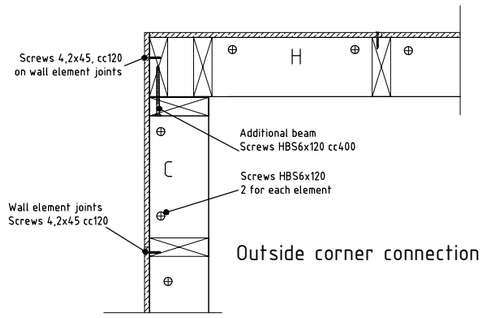

Outside corner connection

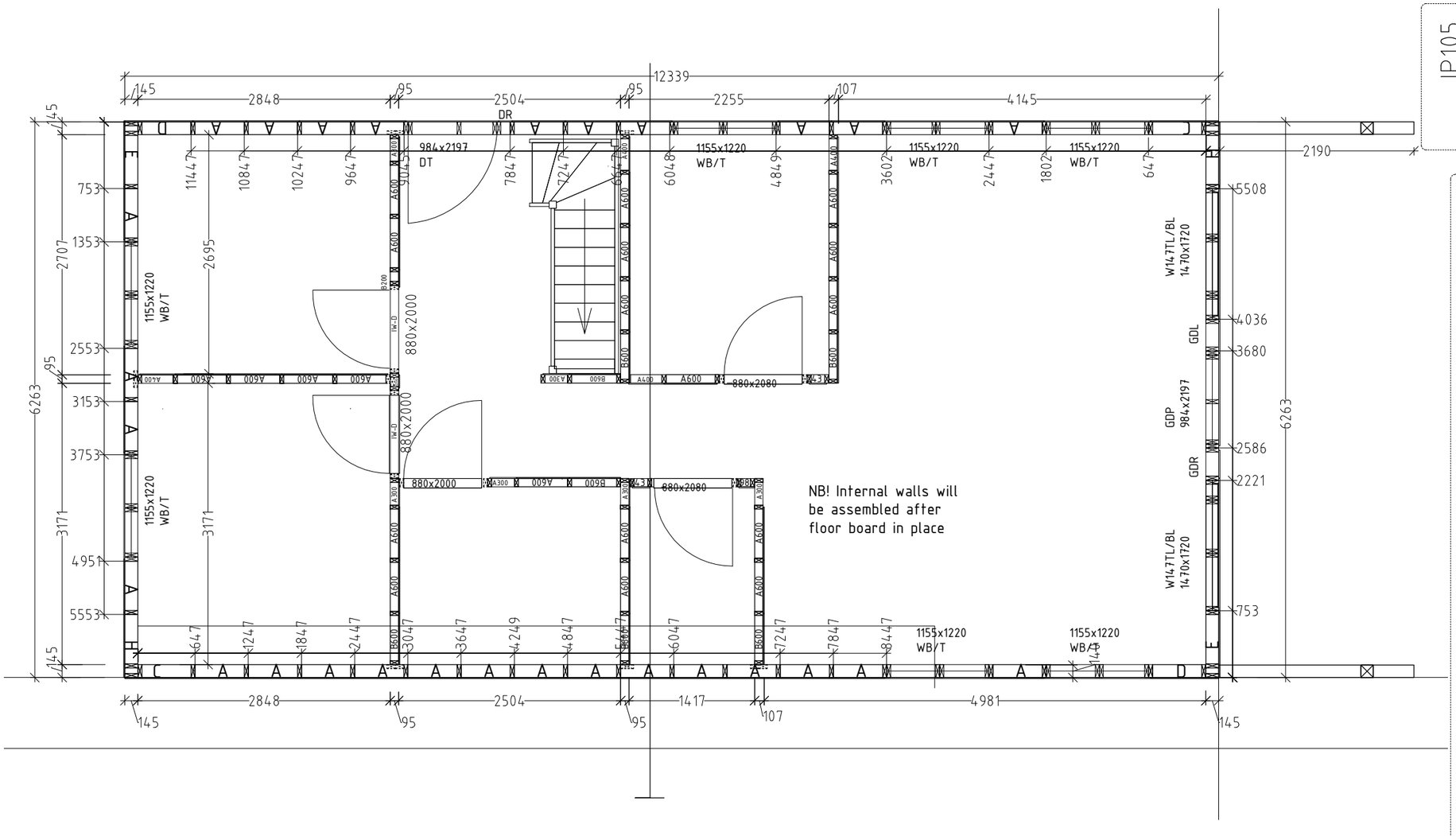

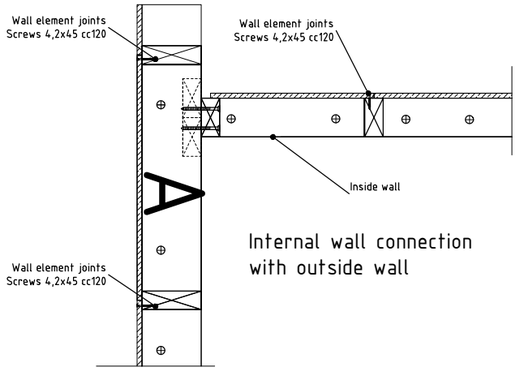

Internal wall connection
with outside wall

External wall connection
with base belt

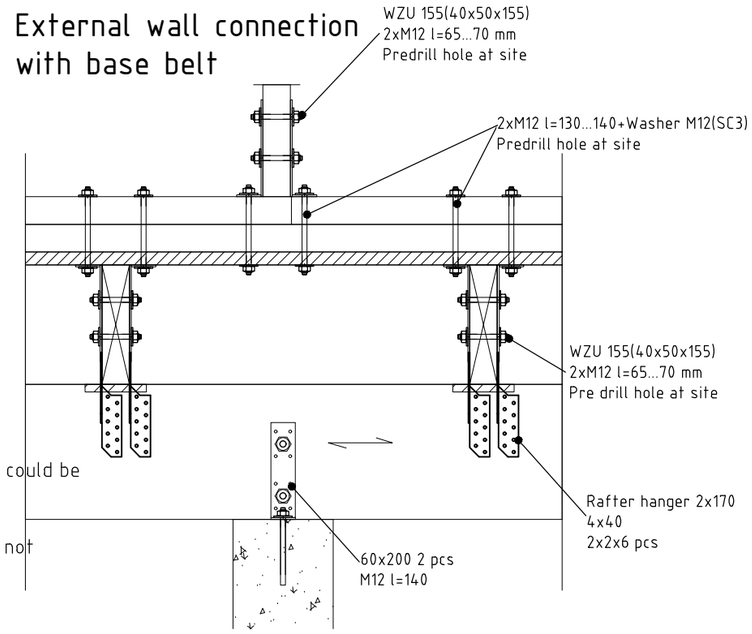

Notes:

1. Follow appropriate detail drawings to fasten elements.
2. All external dimensions are based on external surface of main timber frame.
3. Follow given dimensions for installing elements. Gap between element plywoods could be 1-2 mm.
4. Cover element joints with tape.
5. Installation plans and fastening materials are recommended by factory and are not mandatory.
6. Factory is not responsible for this project statics and stability.

IP105

GROUND FLOORL WALLS 08.07.2022 M 1:50 / A3L

ID:000-2018; project:Klettar 80m2; designer: M.K.;Drawer: M.K

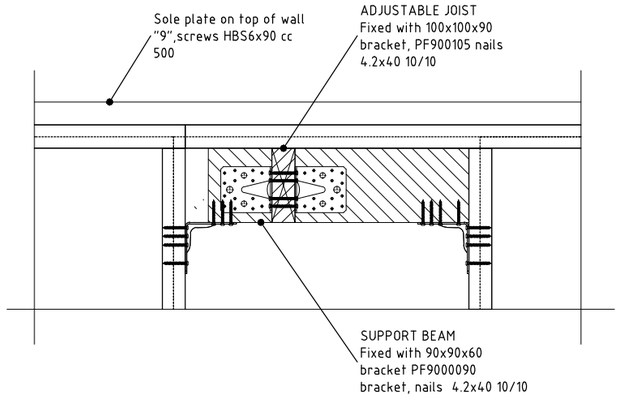

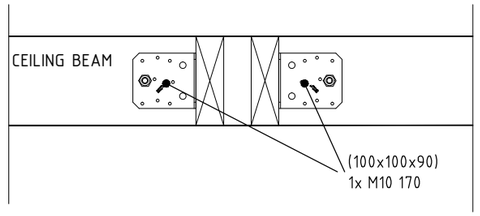

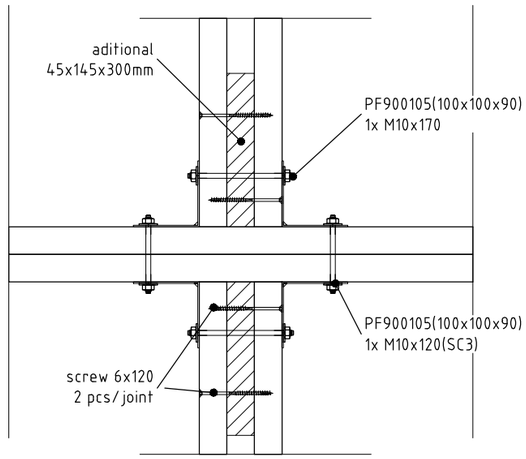

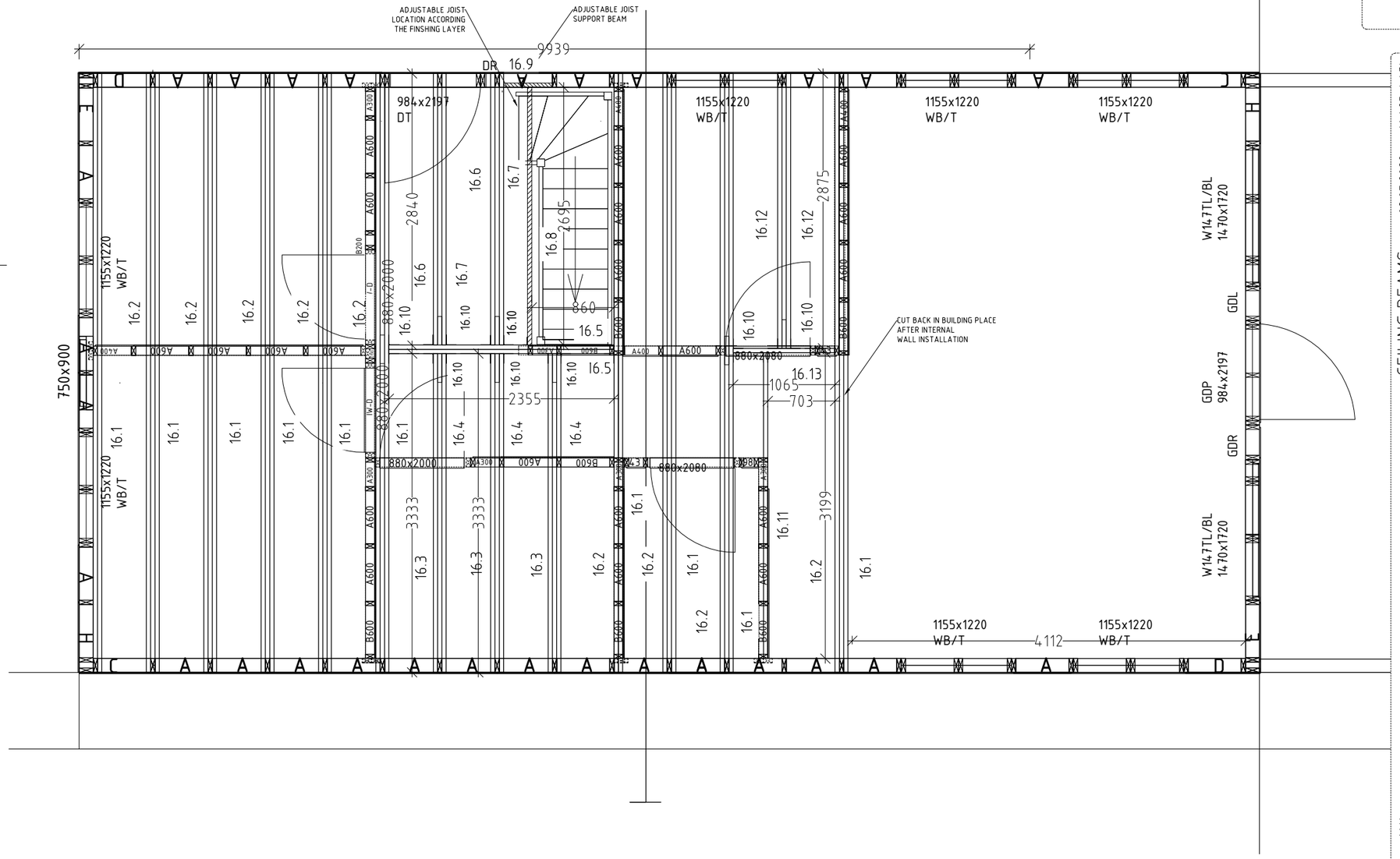

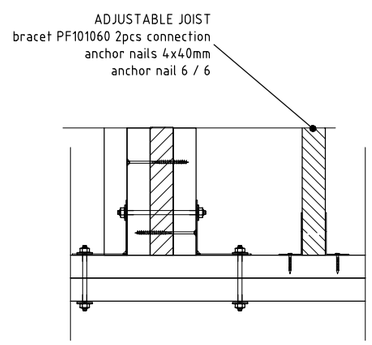

NB!
Ceiling beams must be temporary supported until internal walls are in place

Notes:
1. Follow appropriate detail drawings to fasten the elements.
2. Dimensions are based on external perimeter of main timber frame.
3. Installation plans and fastening materials are recommended by factory and are not mandatory.
4. Factory is not responsible for this project statics and stability.

IP106

CEILING BEAMS 08.07.2022 M 1:25 / A3L

ID:000-2018; project:Klettar 80m2; designer: M.K ;Drawer: M.K

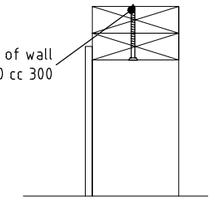

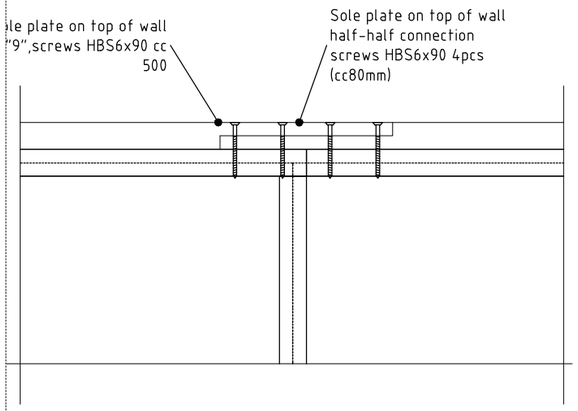

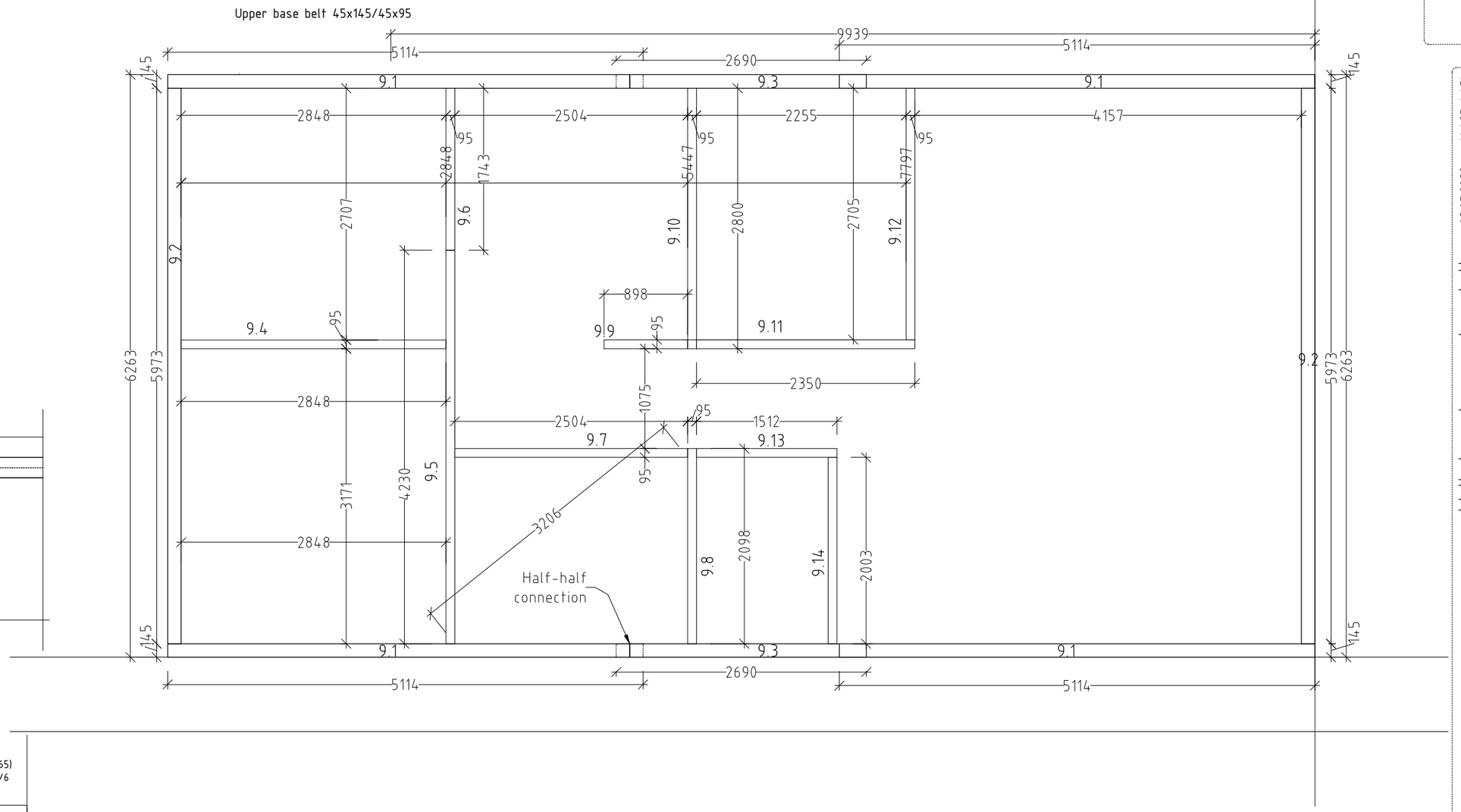

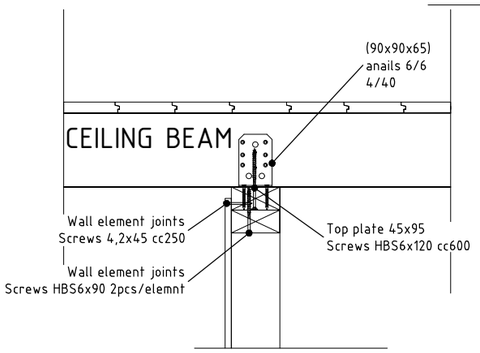

Notes:
1. External dimensions are based on external surface of main timber frame
2. Installation plans and fastening materials are recommended by factory and are not mandatory.
3. Factory is not responsible for this project statics and stability.

IP107

Wall elements upper base belt

08.07.2022 M 1:25 / A3L

ID:000-2018; project:Klettar 80m2; designer: M.K ;Drawer: M.K

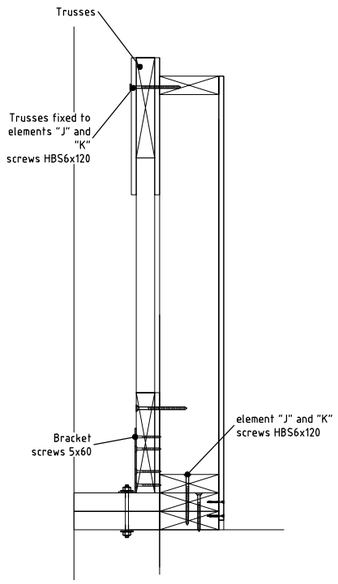

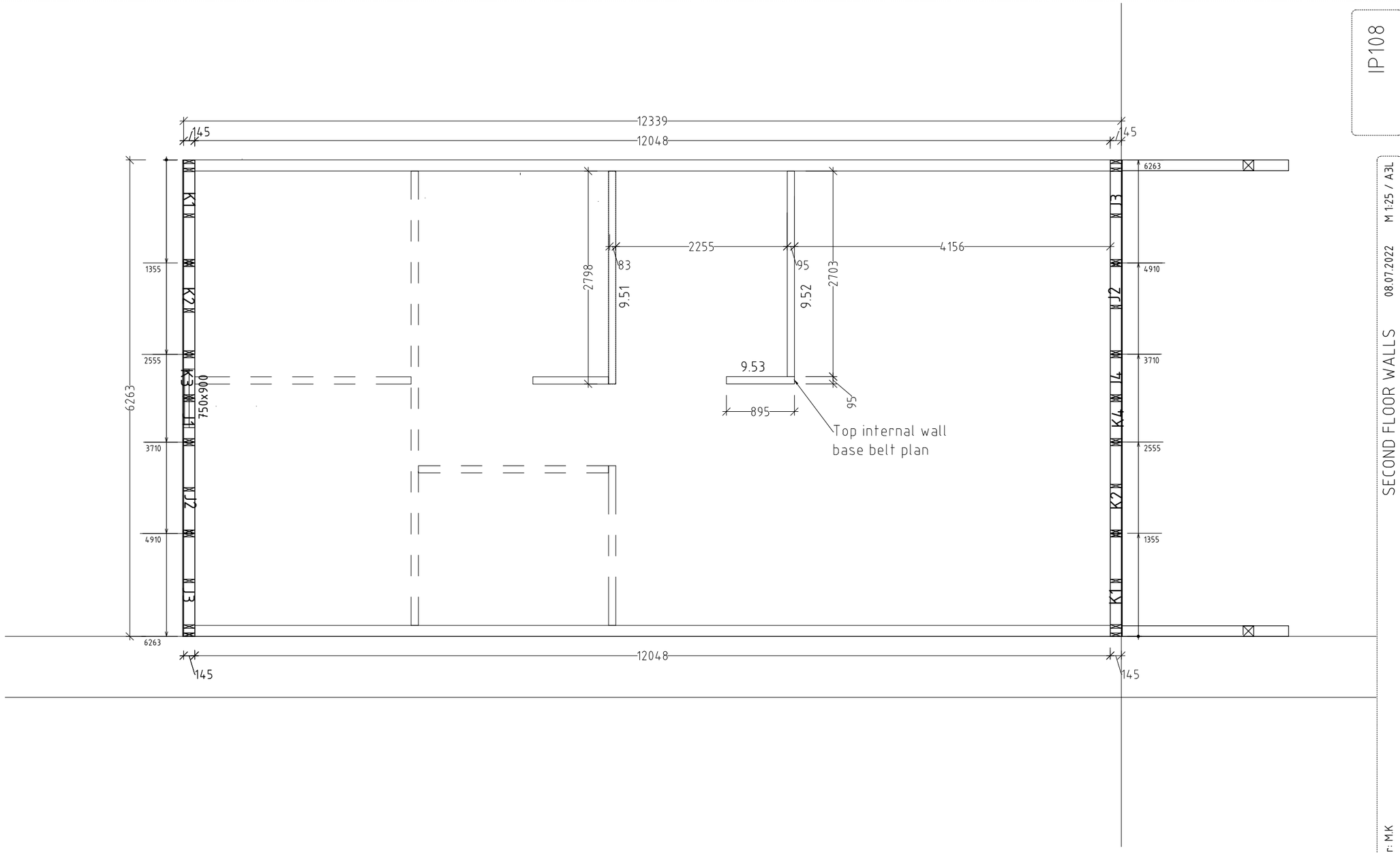

Notes:

1. Follow appropriate detail drawings to fasten elements.
2. Installation plans and fastening materials are recommended by factory and are not mandatory.
3. Factory is not responsible for this project statics and stability.

IP108

SECOND FLOOR WALLS

08.07.2022 M 1:25 / A3L

ID:000-2018; project:Klettar 80m2; designer: M.K ;Drawer: M.K

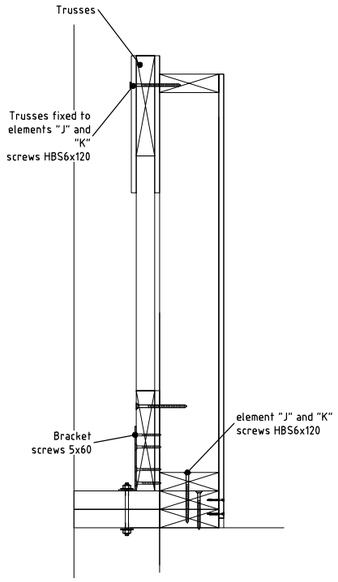

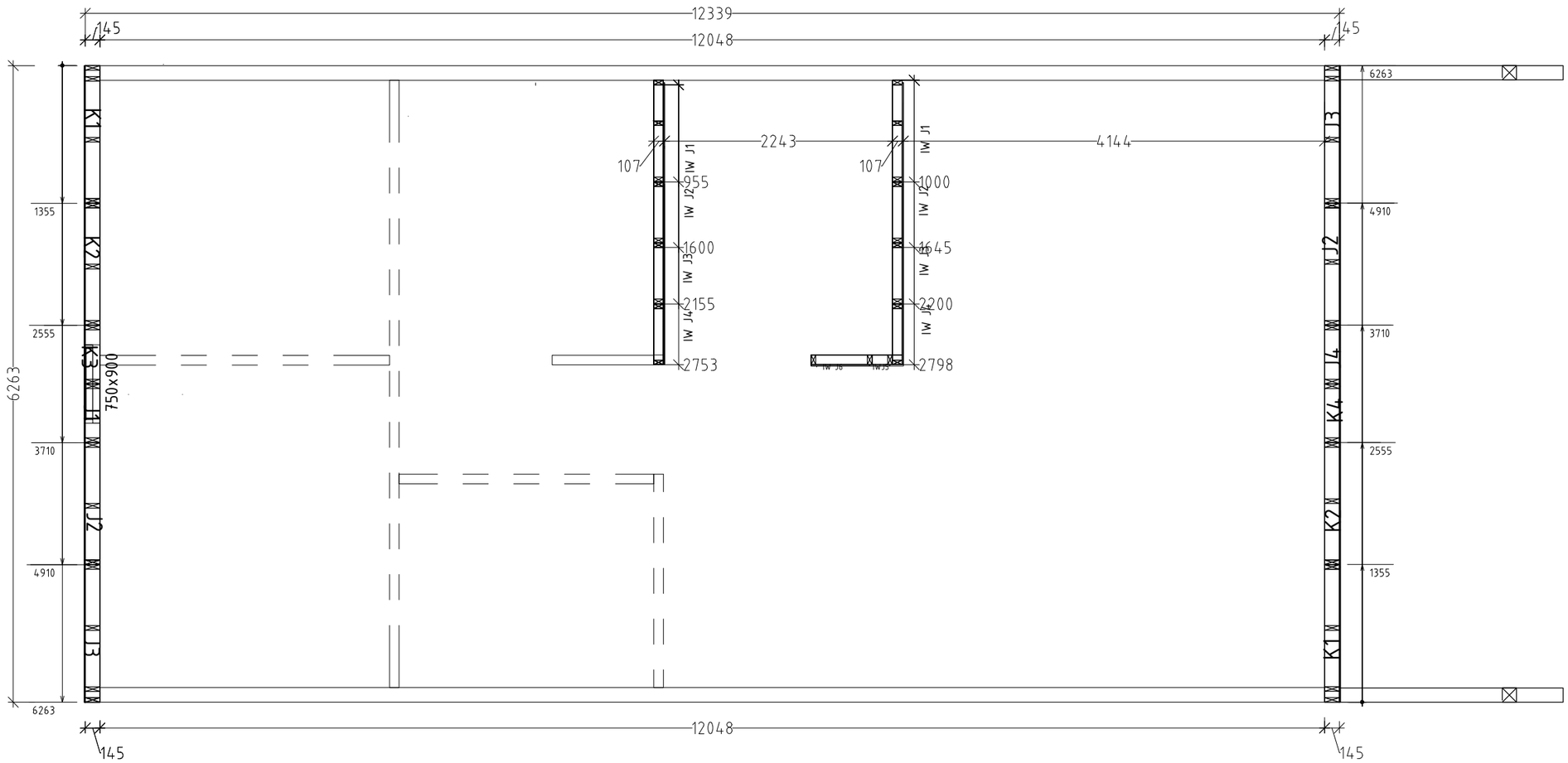

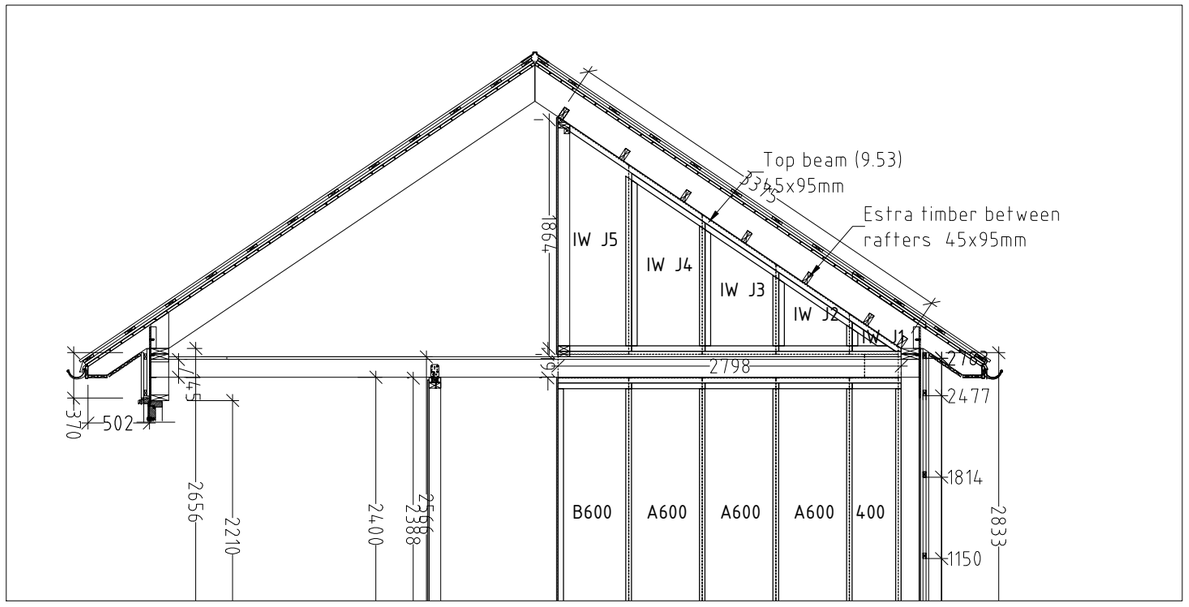

Notes:

1. Follow appropriate detail drawings to fasten elements.
2. Installation plans and fastening materials are recommended by factory and are not mandatory.
3. Factory is not responsible for this project statics and stability.

IP108-1

SECOND FLOOR WALLS 08.07.2022 M 1:25 / A3L

ID:000-2018; project:Klettar 80m2; designer: M.K.;Drawer: M.K

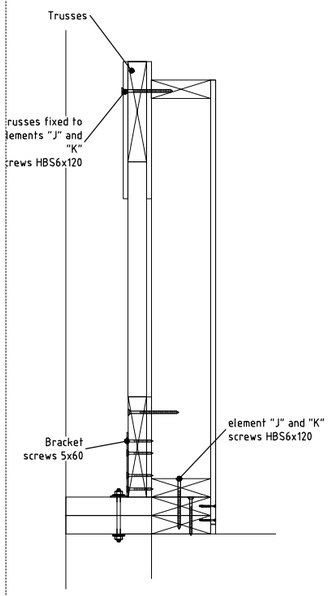

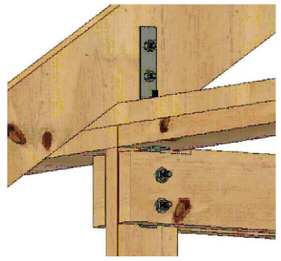

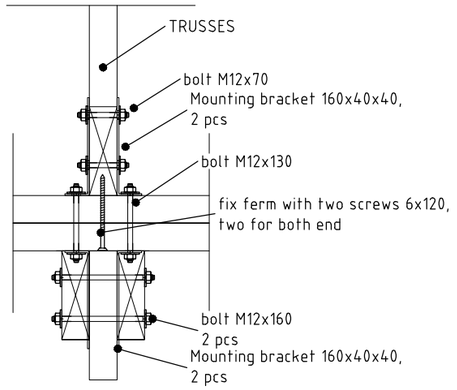

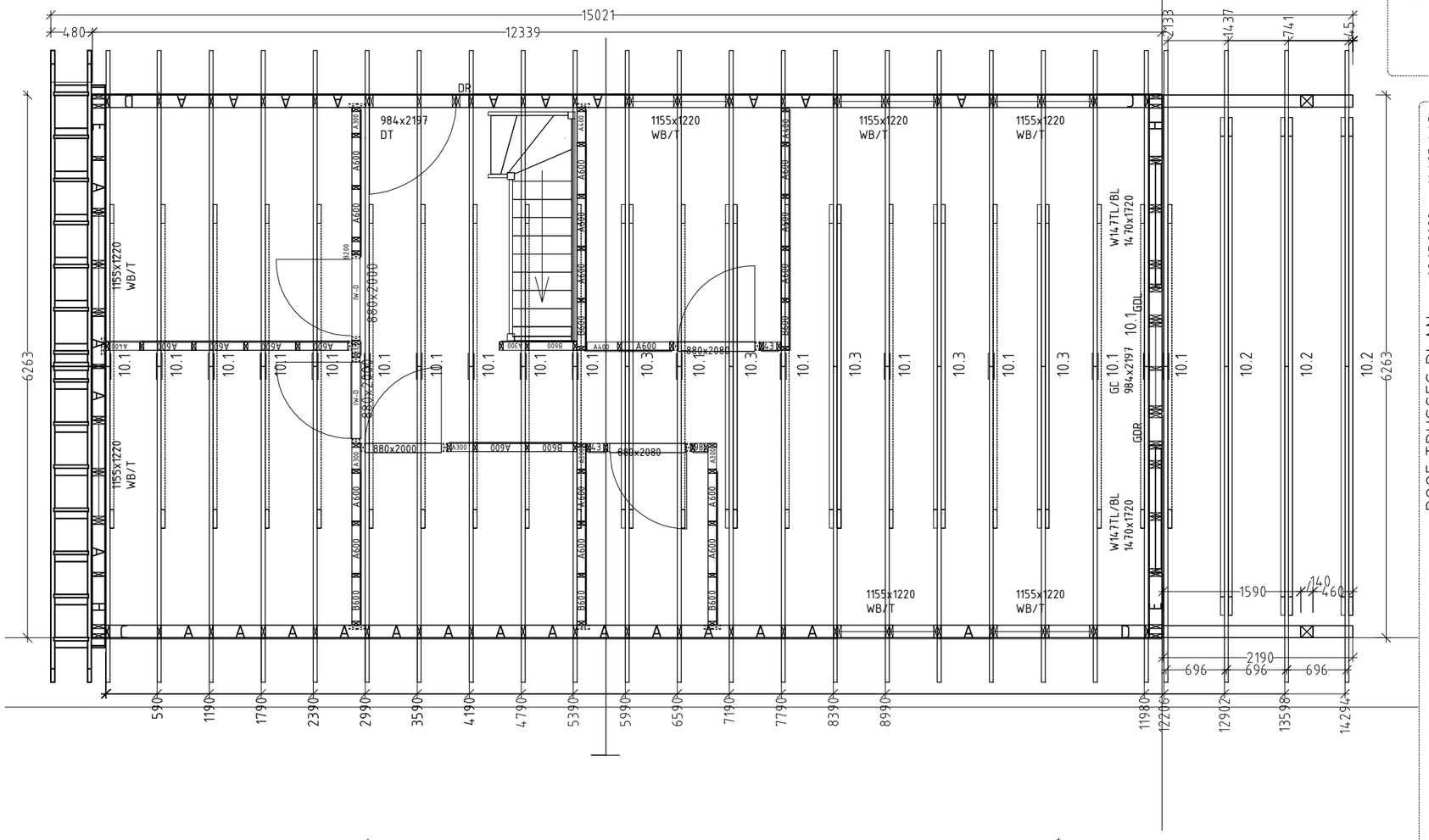

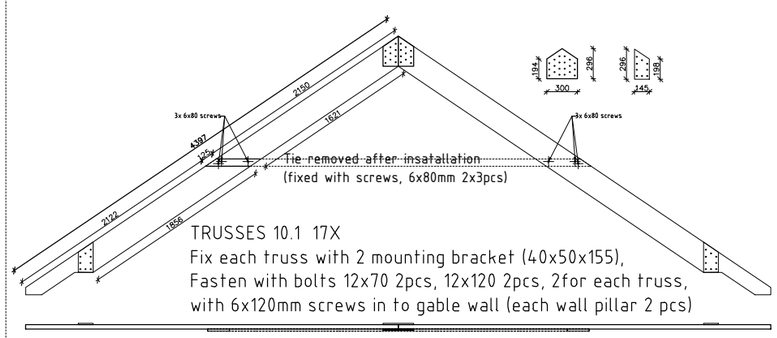

TRUSSES 10.1 17X
Fix each truss with 2 mounting bracket (40x50x155),
Fasten with bolts 12x70 2pcs, 12x120 2pcs, 2for each truss,
with 6x120mm screws in to gable wall (each wall pillar 2 pcs)

10.1

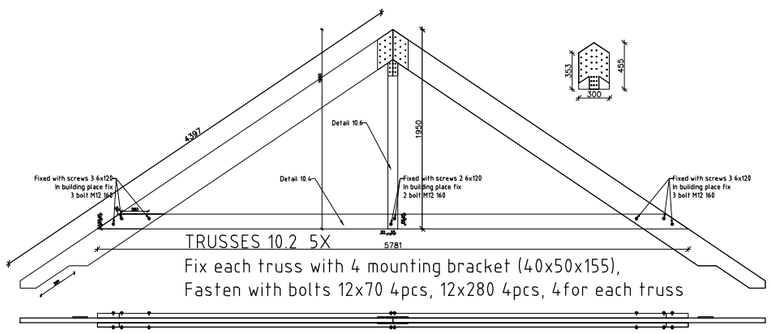

TRUSSES 10.2 5X
Fix each truss with 4 mounting bracket (40x50x155),
Fasten with bolts 12x70 4pcs, 12x280 4pcs, 4for each truss

10.2

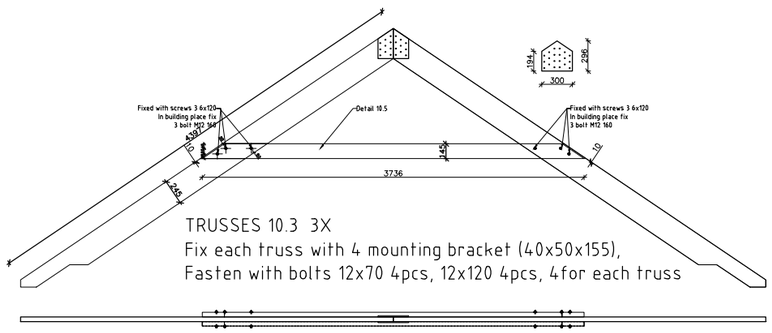

TRUSSES 10.3 3X
Fix each truss with 4 mounting bracket (40x50x155),
Fasten with bolts 12x70 4pcs, 12x120 4pcs, 4for each truss

10.3

Notes:
1. Follow appropriate detail drawings to fasten elements.
2. Installation plans and fastening materials are recommended by factory and are not mandatory.
3. Factory is not responsible for this project statics and stability.

Detail 10.4, 10.5, 10.6 predrill hole for bolt M12 at site

IP109

ROOF TRUSSES PLAN

08.07.2022 M 1:25 / A3L

designer: M.K ;Drawer: M.K

ID:000-2018; project:Klettar 80m2;

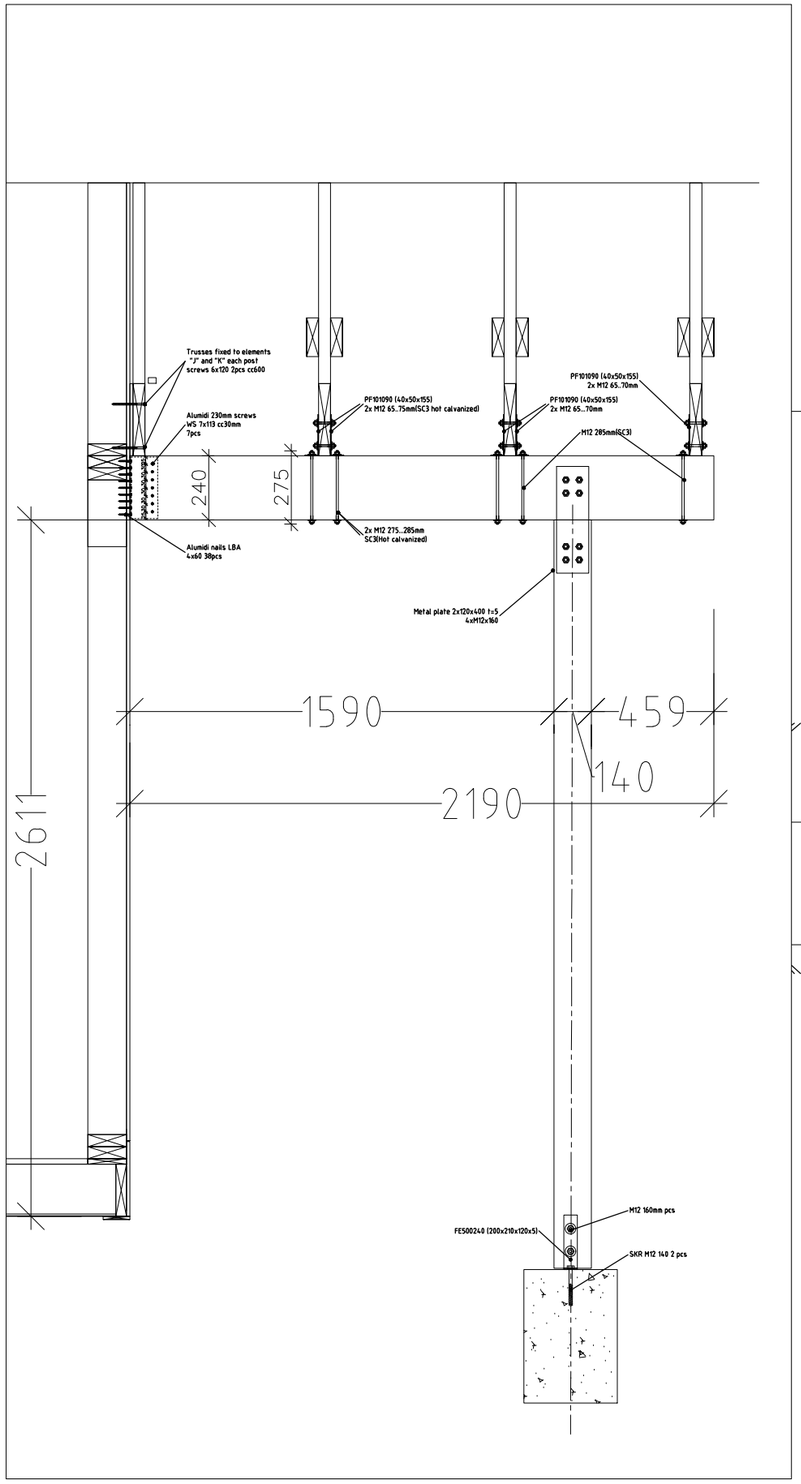

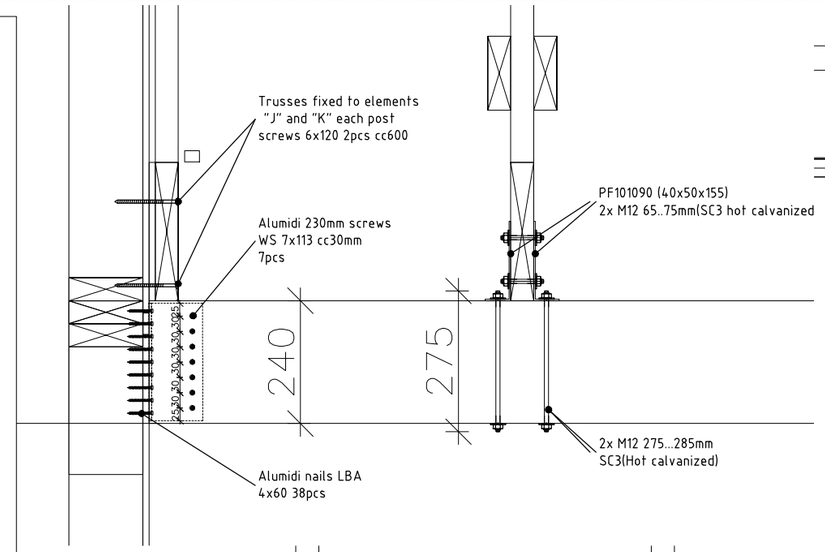

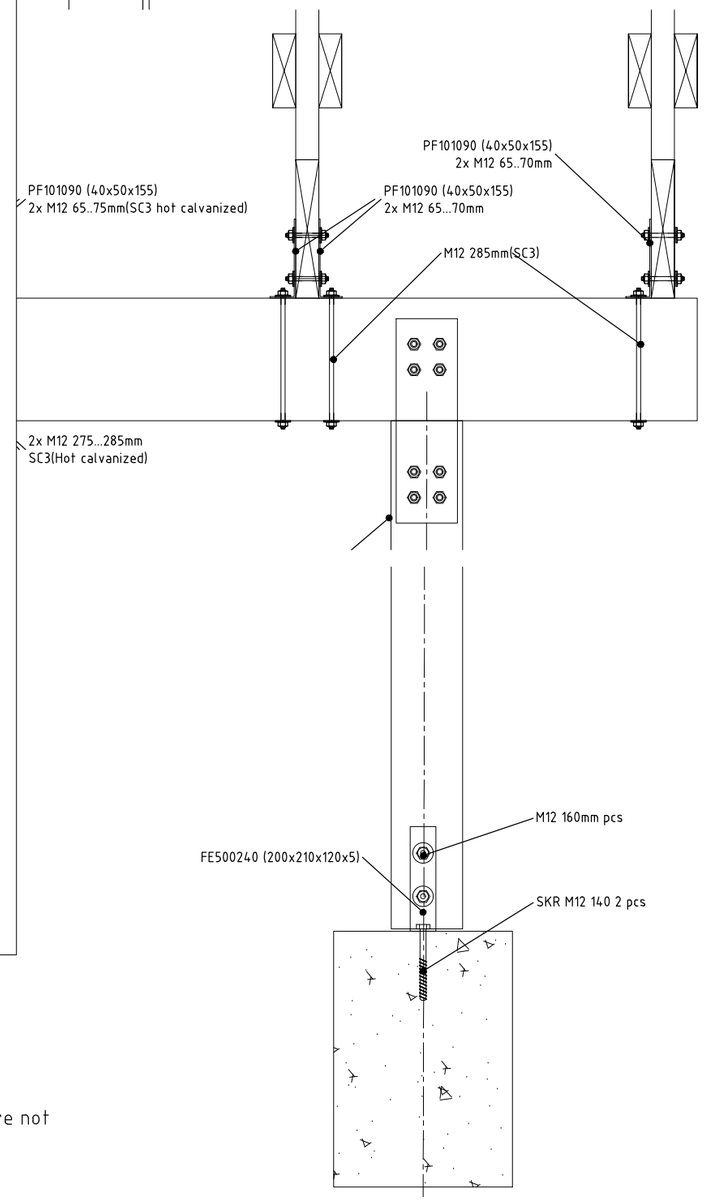

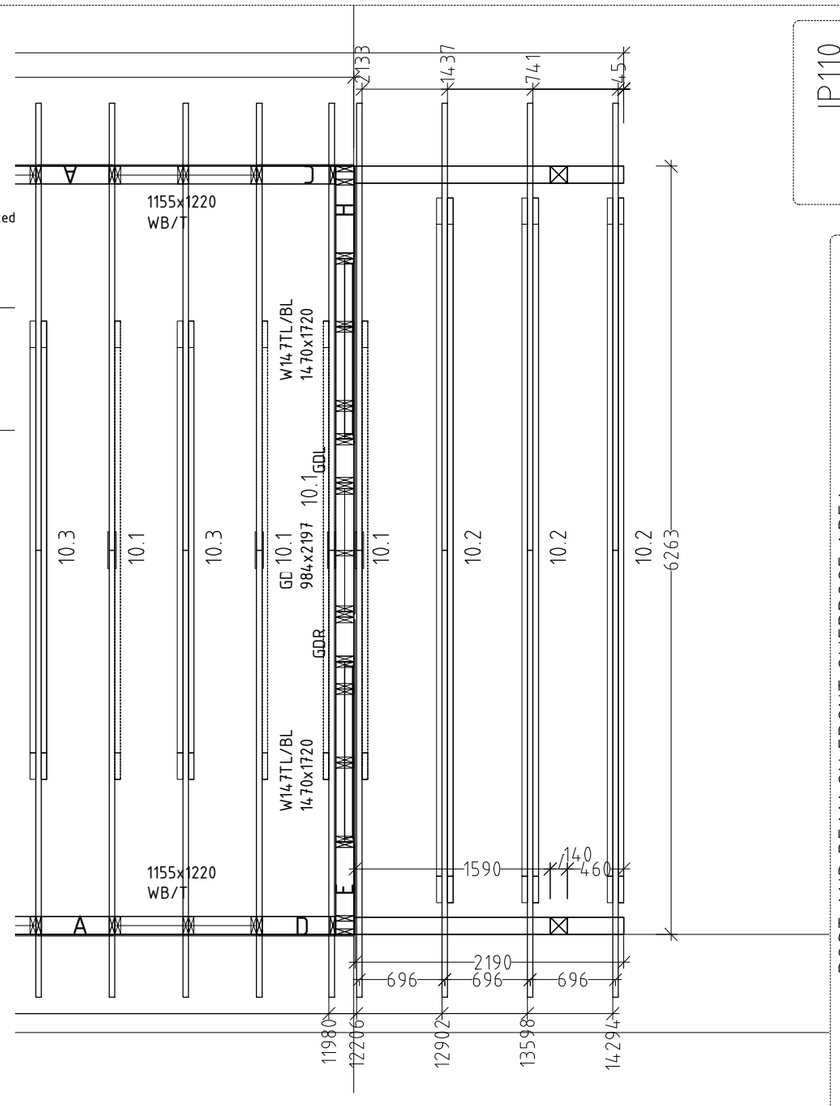

Notes:

1. Follow appropriate detail drawings to fasten elements.
2. Installation plans and fastening materials are recommended by factory and are not mandatory.
3. Factory is not responsible for this project statics and stability.

IP110

POST AND BEAM ON FRONT OVERROOF AREA

08.07.2022 M 1:25 / A3L

ID:000-2018; project:Klettar 80m2; designer: M.K ;Drawer: M.K

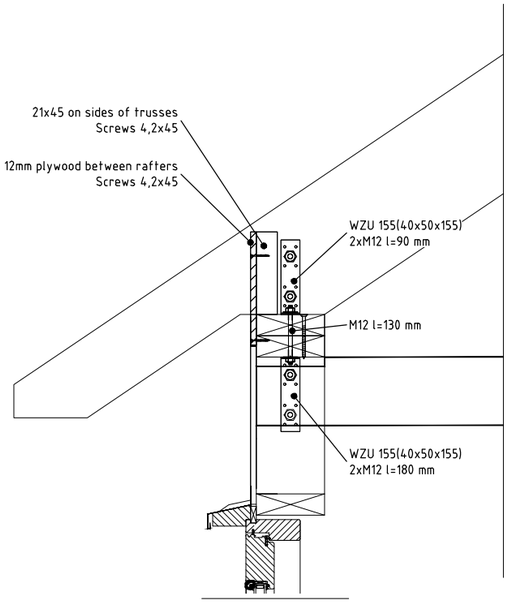

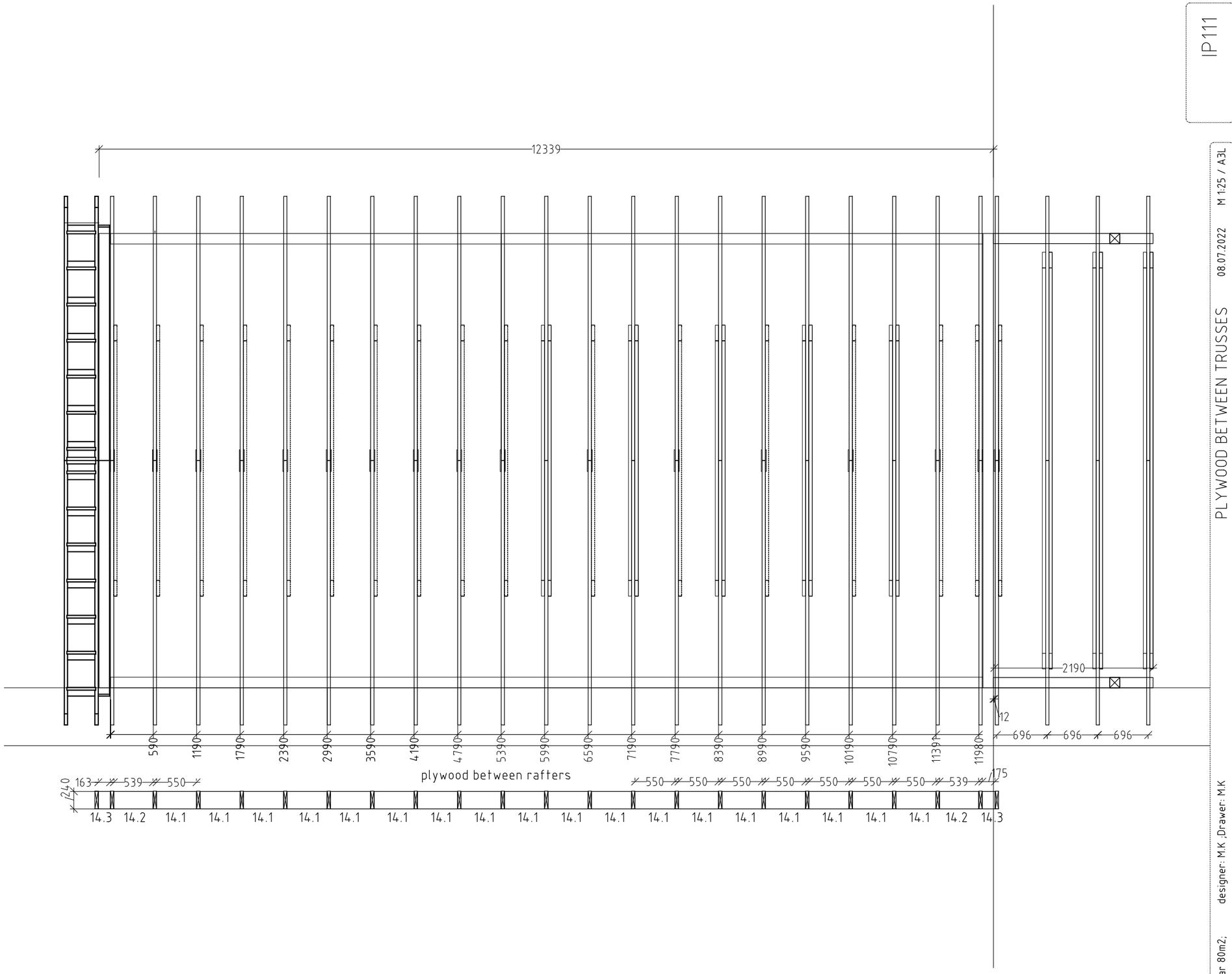

Notes:

1. Follow appropriate detail drawings to fasten elements.
2. Installation plans and fastening materials are recommended by factory and are not mandatory.
3. Factory is not responsible for this project statics and stability.

IP111

PLYWOOD BETWEEN TRUSSES

08.07.2022 M 1:25 / A3L

ID:000-2018; project:Klettar 80m2; designer: M.K ,Drawer: M.K

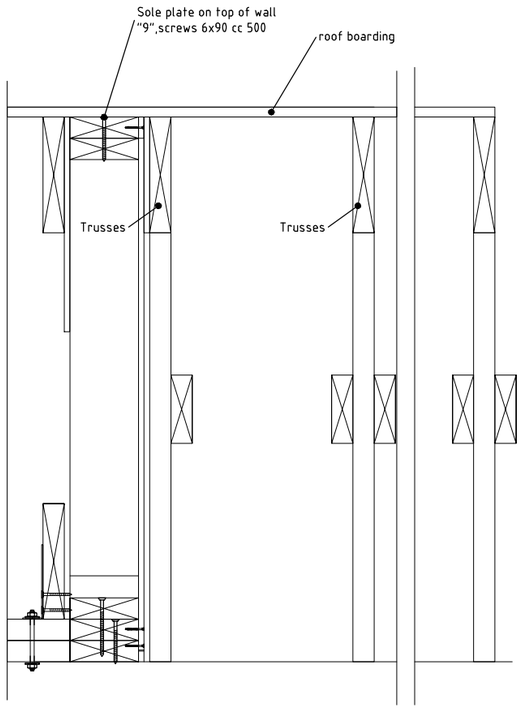

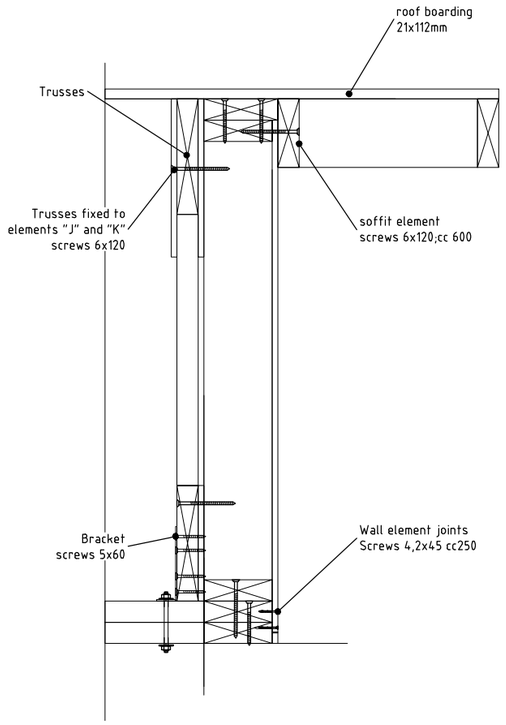

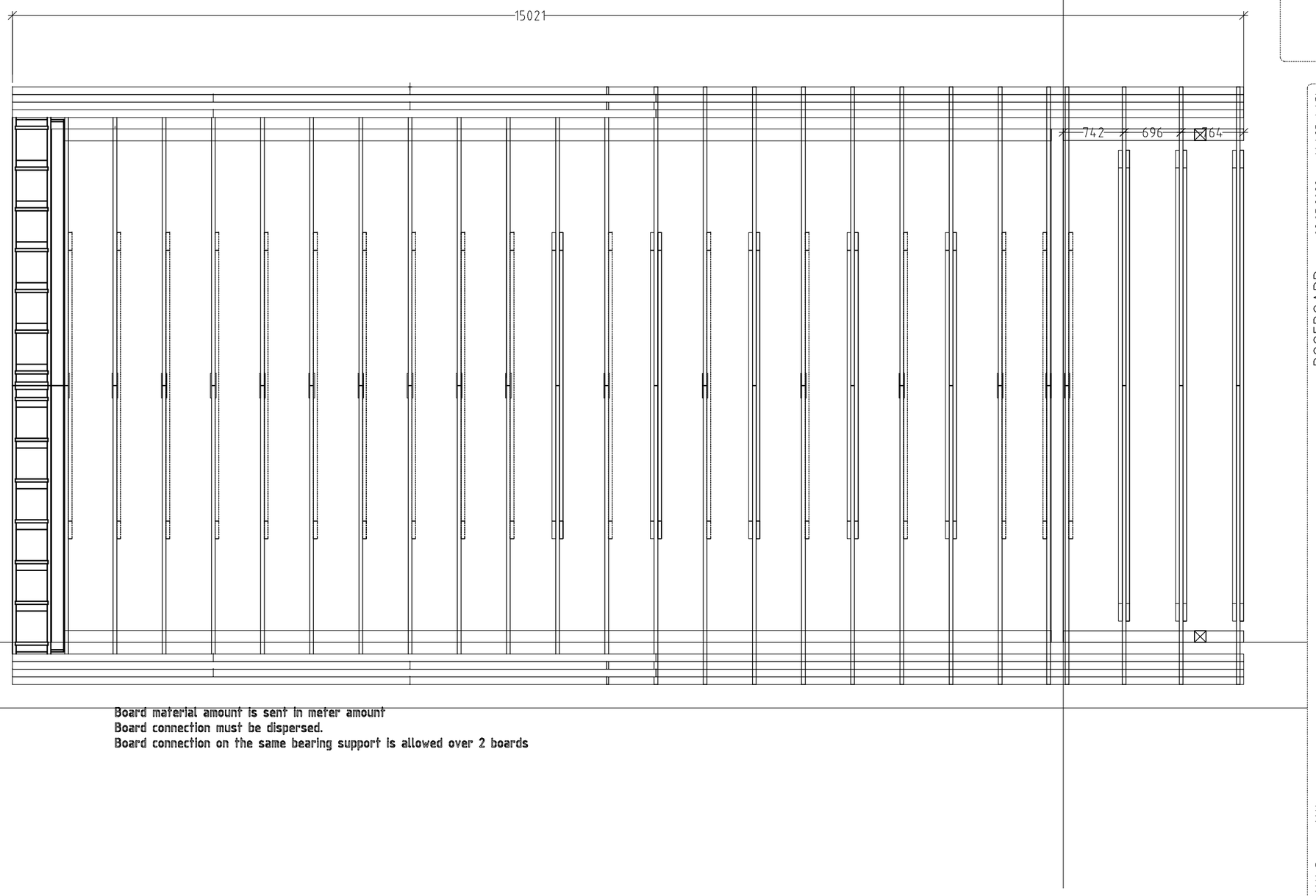

Board material amount is sent in meter amount
Board connection must be dispersed.
Board connection on the same bearing support is allowed over 2 boards

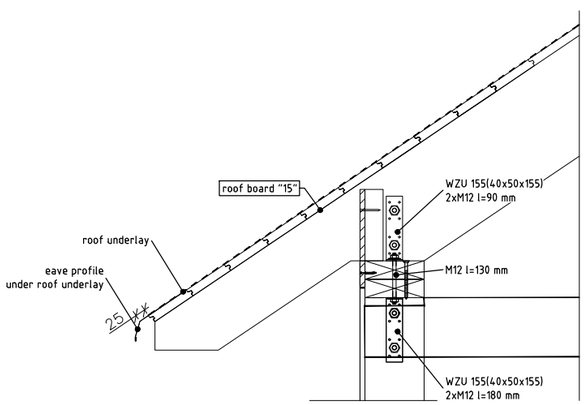

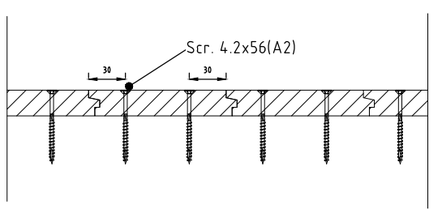

Notes:

1. Follow appropriate detail drawings to fasten elements.
2. Installation plans and fastening materials are recommended by factory and are not mandatory.
3. Factory is not responsible for this project statics and stability.

IP112

ROOFBOARD 08.07.2022 M 1:25 / A3L

ID:000-2018; project:Klettar 80m2; designer: M.K ;Drawer: M.K

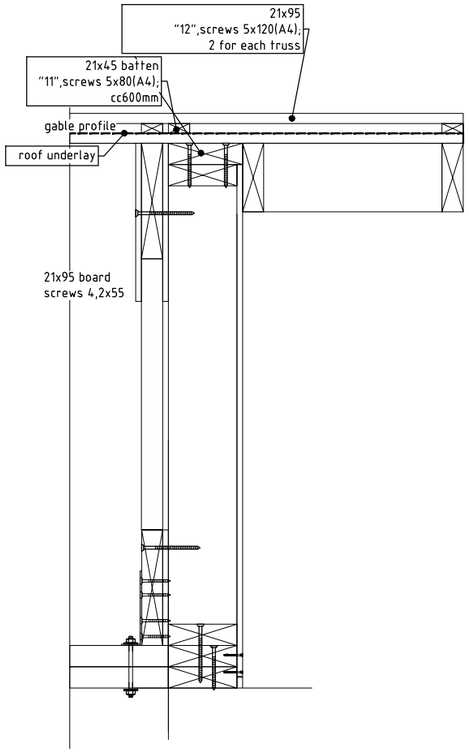

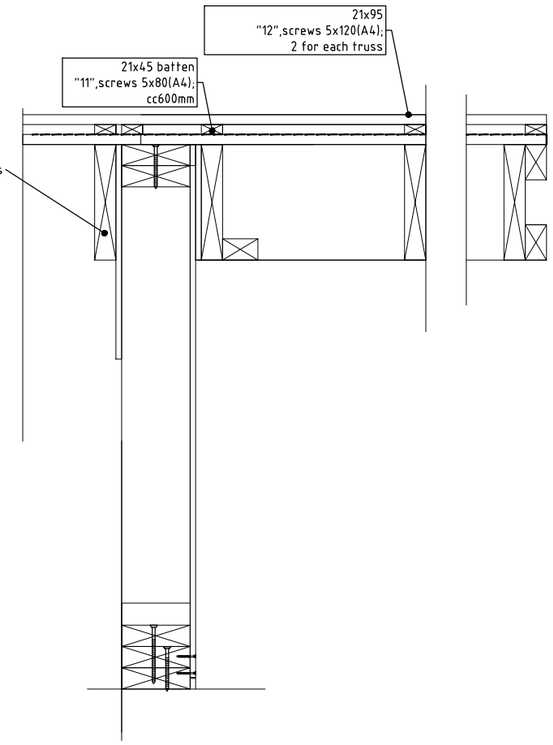

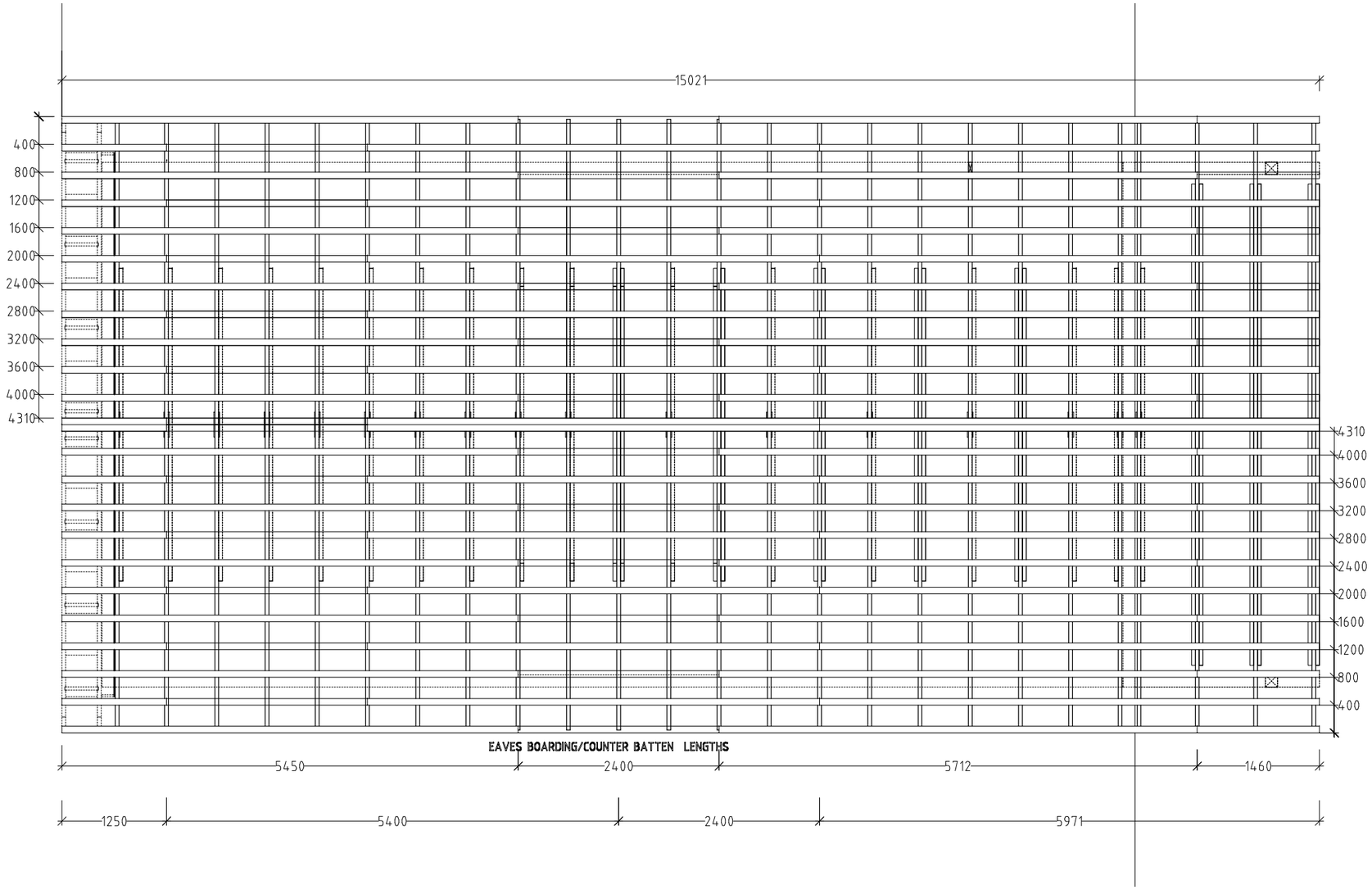

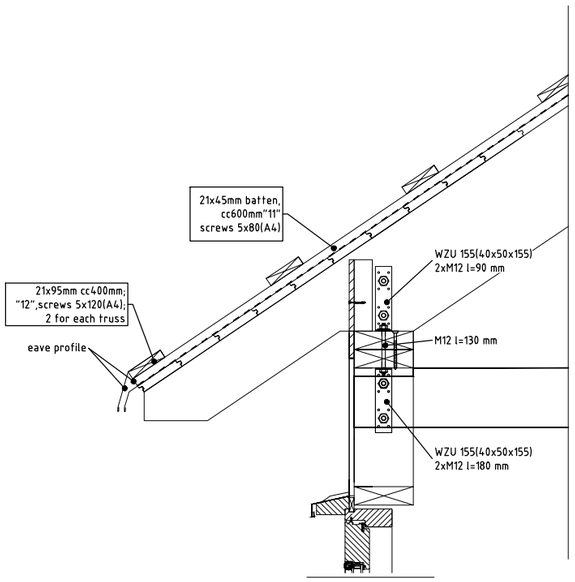

Notes:

1. Follow appropriate detail drawings to fasten elements.
2. Installation plans and fastening materials are recommended by factory and are not mandatory.
3. Factory is not responsible for this project statics and stability.

IP113

ROOF BATTEN 08.07.2022 M 1:25 / A3L

ID:000-2018; project:Klettar 80m2; designer: M.K ;Drawer: M.K

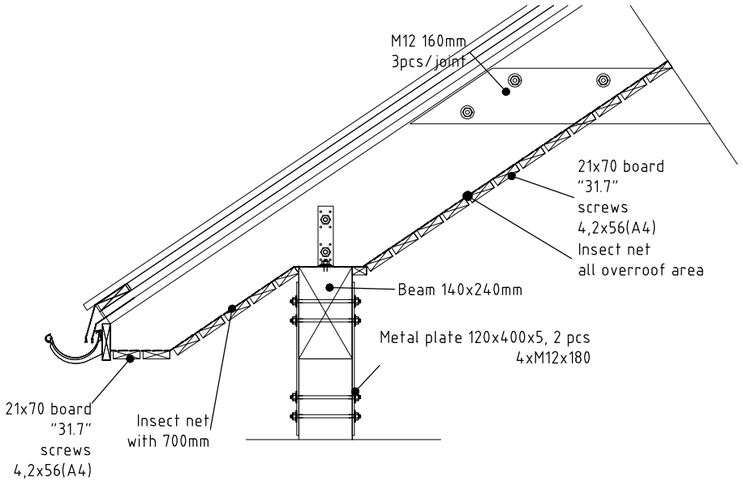

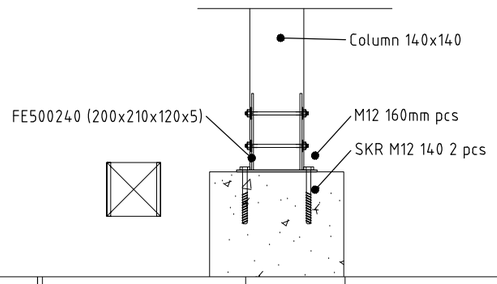

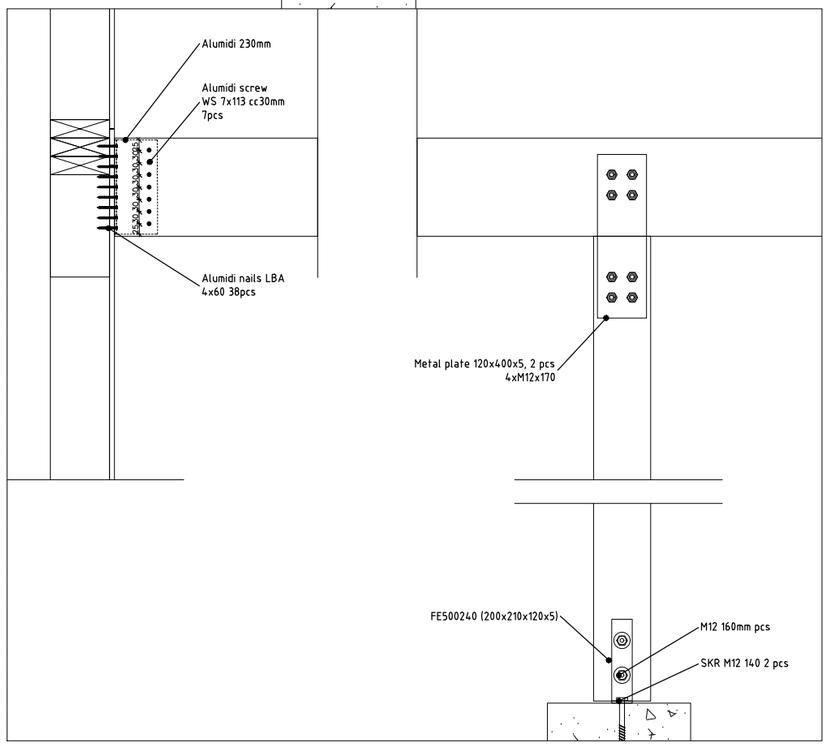

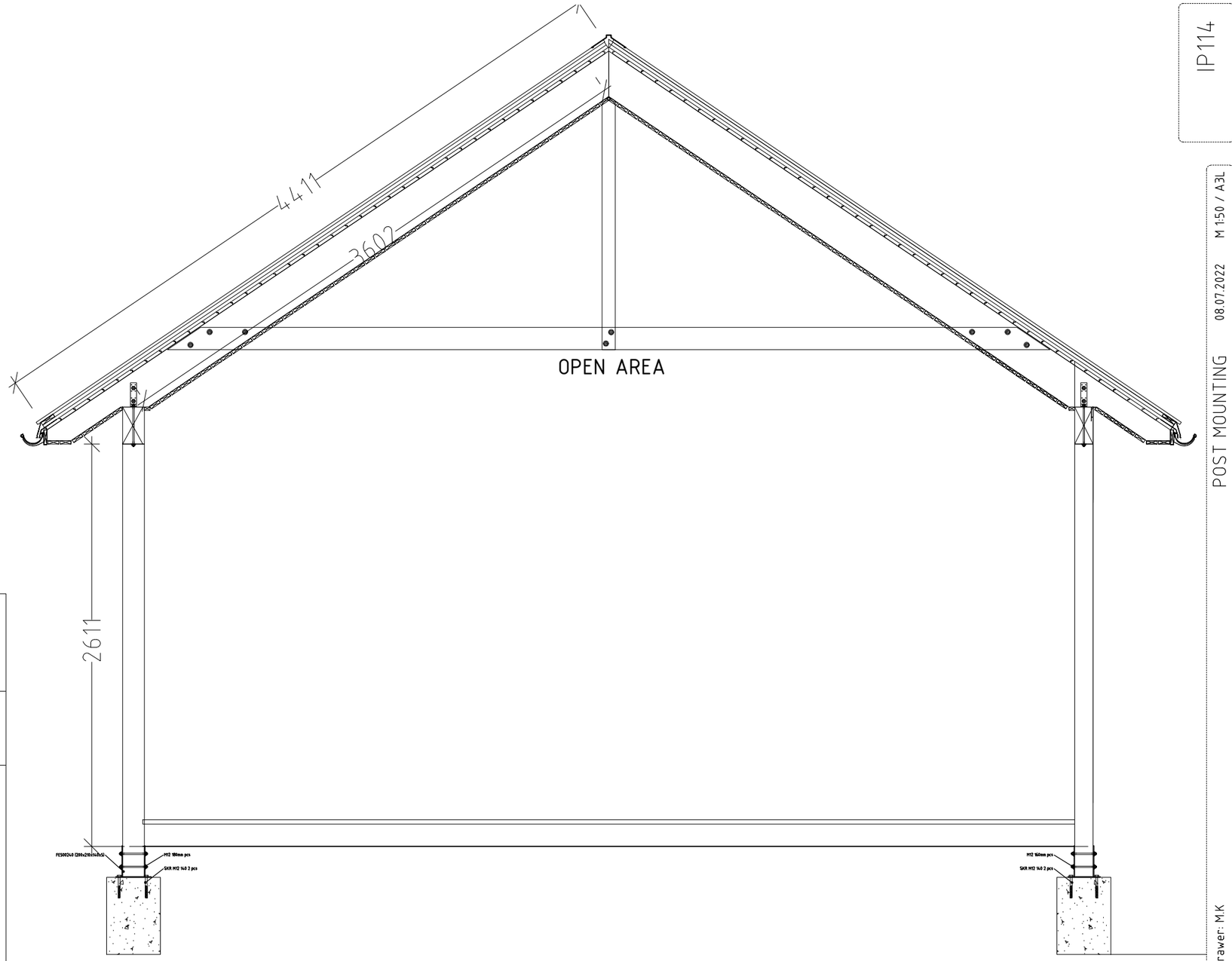

Notes:

1. Follow appropriate detail drawings to fasten elements.
2. Parapet steel profile installation order: corner profile and end profile, parapet profile.
3. Installation plans and fastening materials are recommended by factory and are not mandatory.
4. Factory is not responsible for this project statics and stability.

IP114

POST MOUNTING 08.07.2022 M 1:50 / A3L

ID:000-2018; project:Klettar 80m2; designer: M.K ;Drawer: M.K

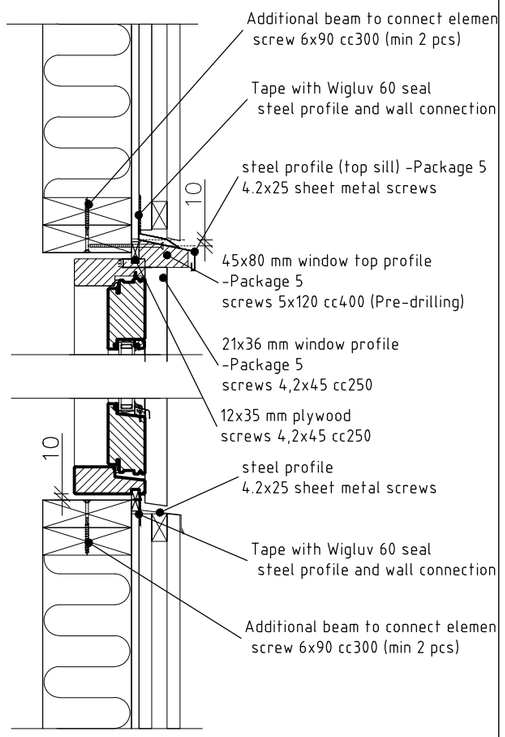

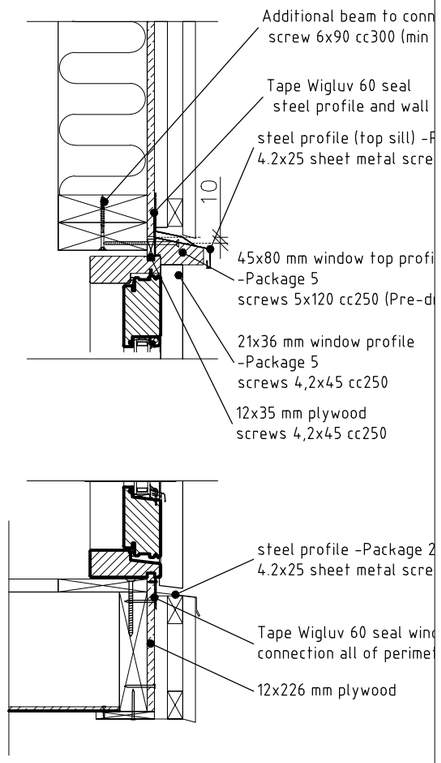

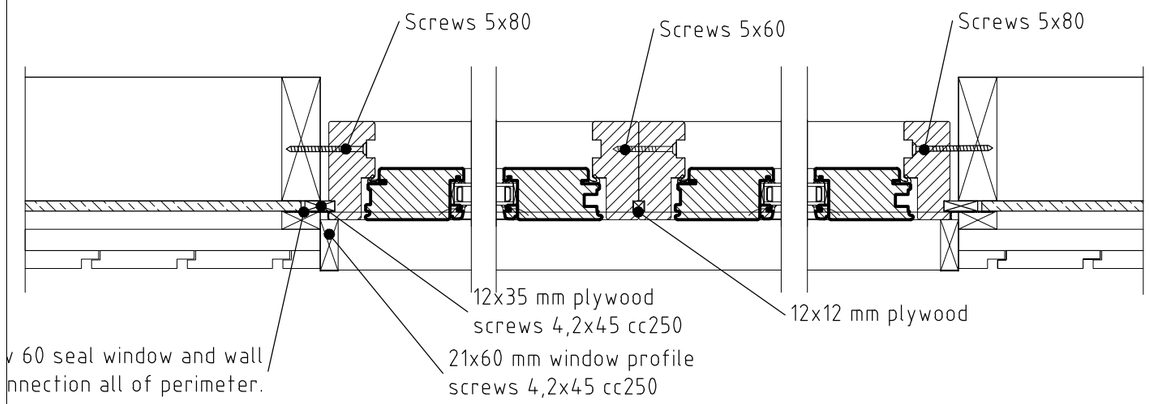

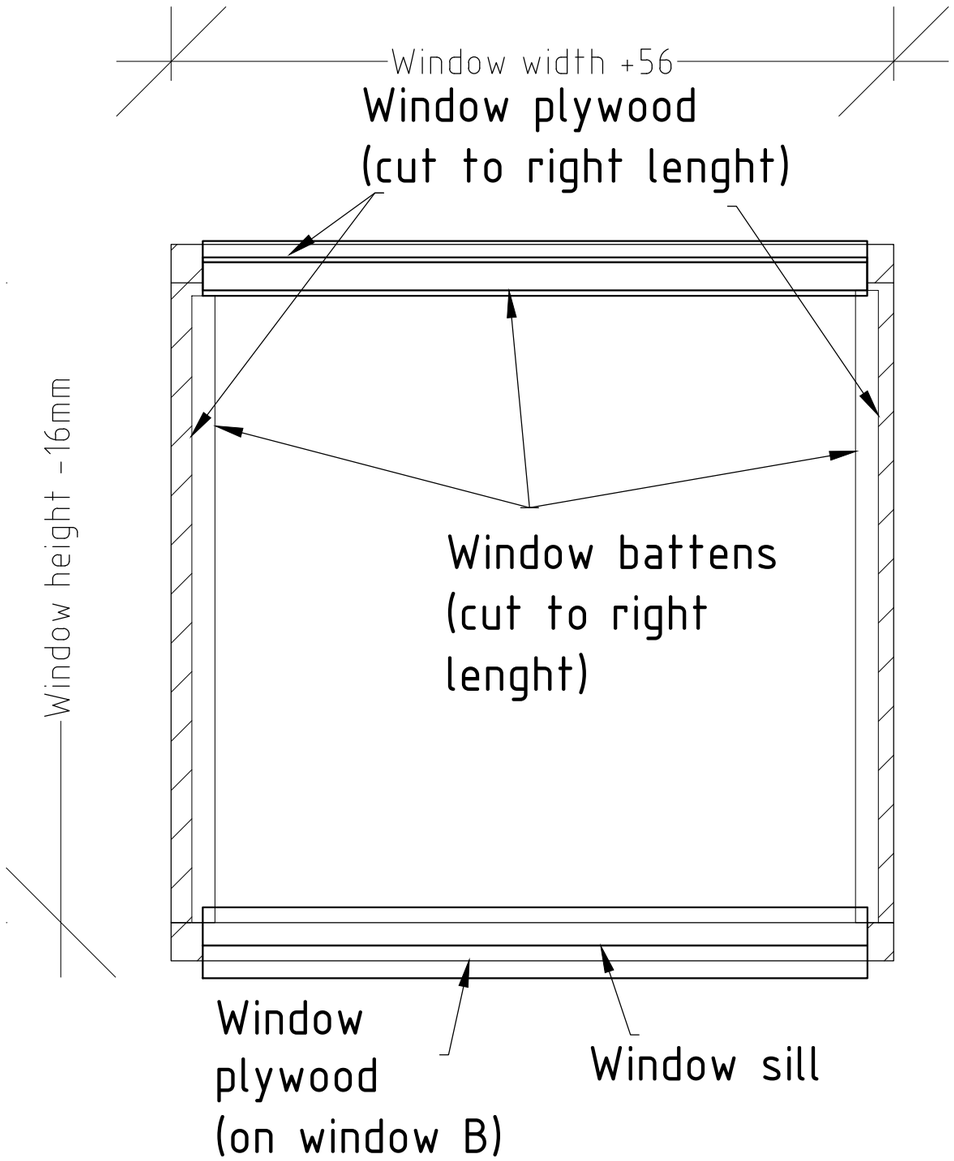

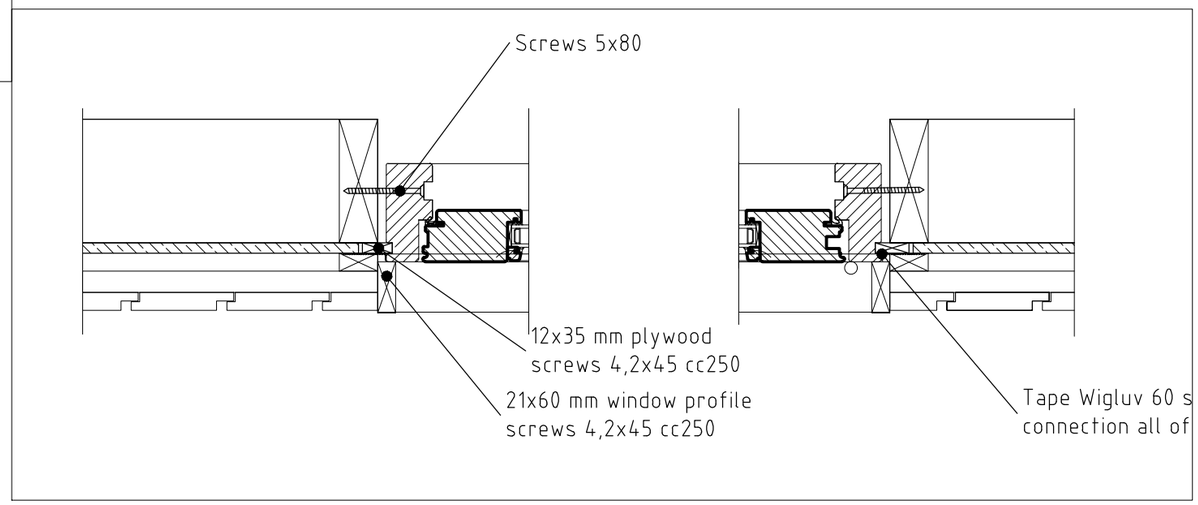

Notes:

1. Follow appropriate detail drawings to install windows.
2. Please ensure that stored doors and windows are before installing secured from moisture and rainwater.
3. Cut window profiles and plywoods in correct lenght
4. Fix 12x35 plywood strips mm into the groove of window side and top jamb.
5. Fix 12x12 plywood strips and apply silicon sealant between jambs where two windows are together, secure jambs with clamp and fasten two windows with screws. Ensure that fixing screws are 90° to jamb
6. Lift windows on top of the plywood fixed on sides of the floor.
7. Fix windows with wedges and screws. Make sure windows opens and closes propperly.
8. Fasten plywood strips to the wall element with nails 2.5x50.
9. Seal windows with foam. Cover with a seal windows form outside so that window jamb is covered min 10 mm.
10. Insatall window profile and steel profile according to drawings.
11. Installation plans and fastening materials are recommended by factory and are not mandatory.
12. Factory is not responsible for this project statics and stability.

IP115

WINDOWS 08.07.2022 M 1:40 / A3L

ID:000-2018; project:Klettar 80m2; designer: M.K ,Drawer: M.K

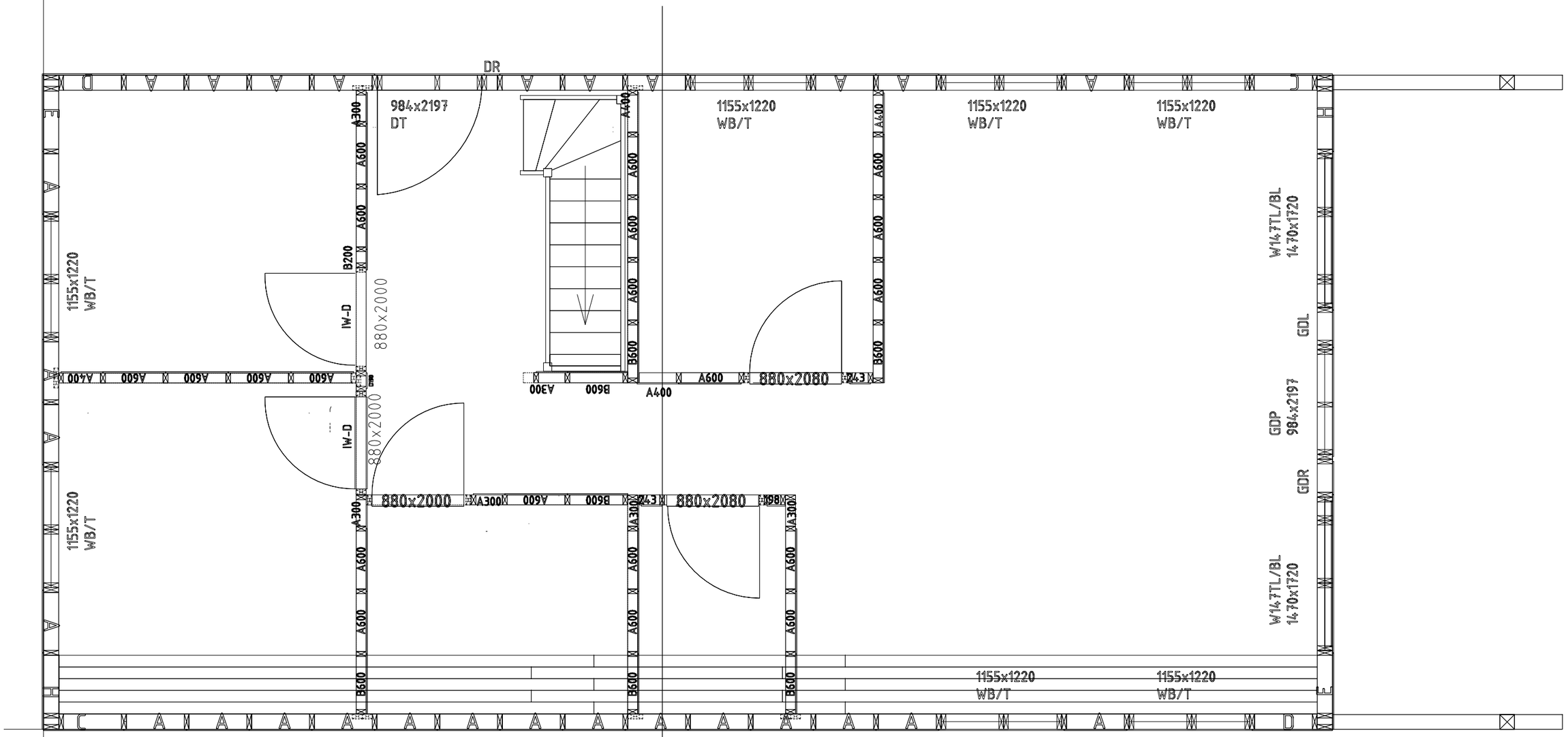

Board material amount is sent in meter amount
Board connection must be dispersed.
Board connection on the same bearing support is allowed over 2 boards
Internal walls will ba assembled after floor board placement

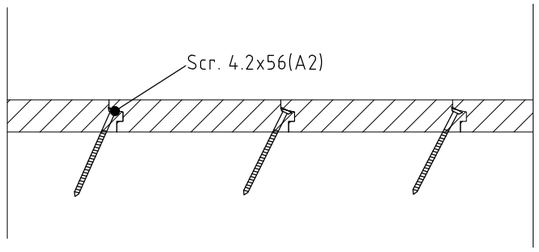

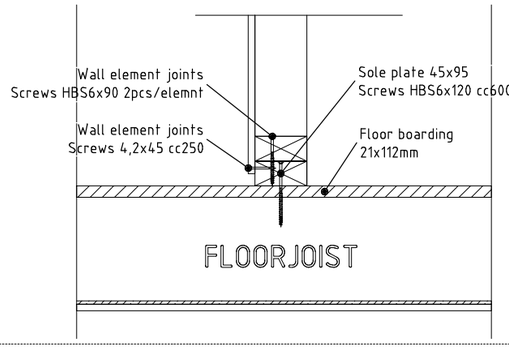

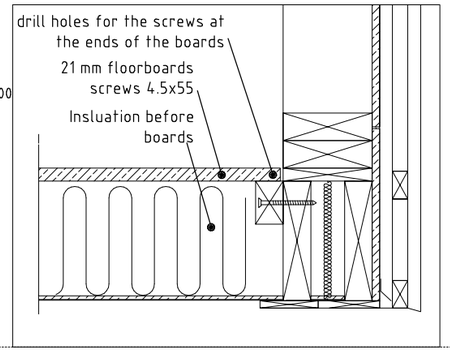

Notes:
1. Follow appropriate detail drawings to fasten elements.
2. Last board of every wall must be cut to correct width.
3. Installation plans and fastening materials are recommended by factory and are not mandatory.
4. Factory is not responsible for this project statics and stability.

IP116

Floorboarding plan ground floor 08.07.2022 M 1:25 / A3L

ID:000-2018; project:Klettar 80m2; designer: M.K ;Drawer: M.K

Base belt 45x145/45x95

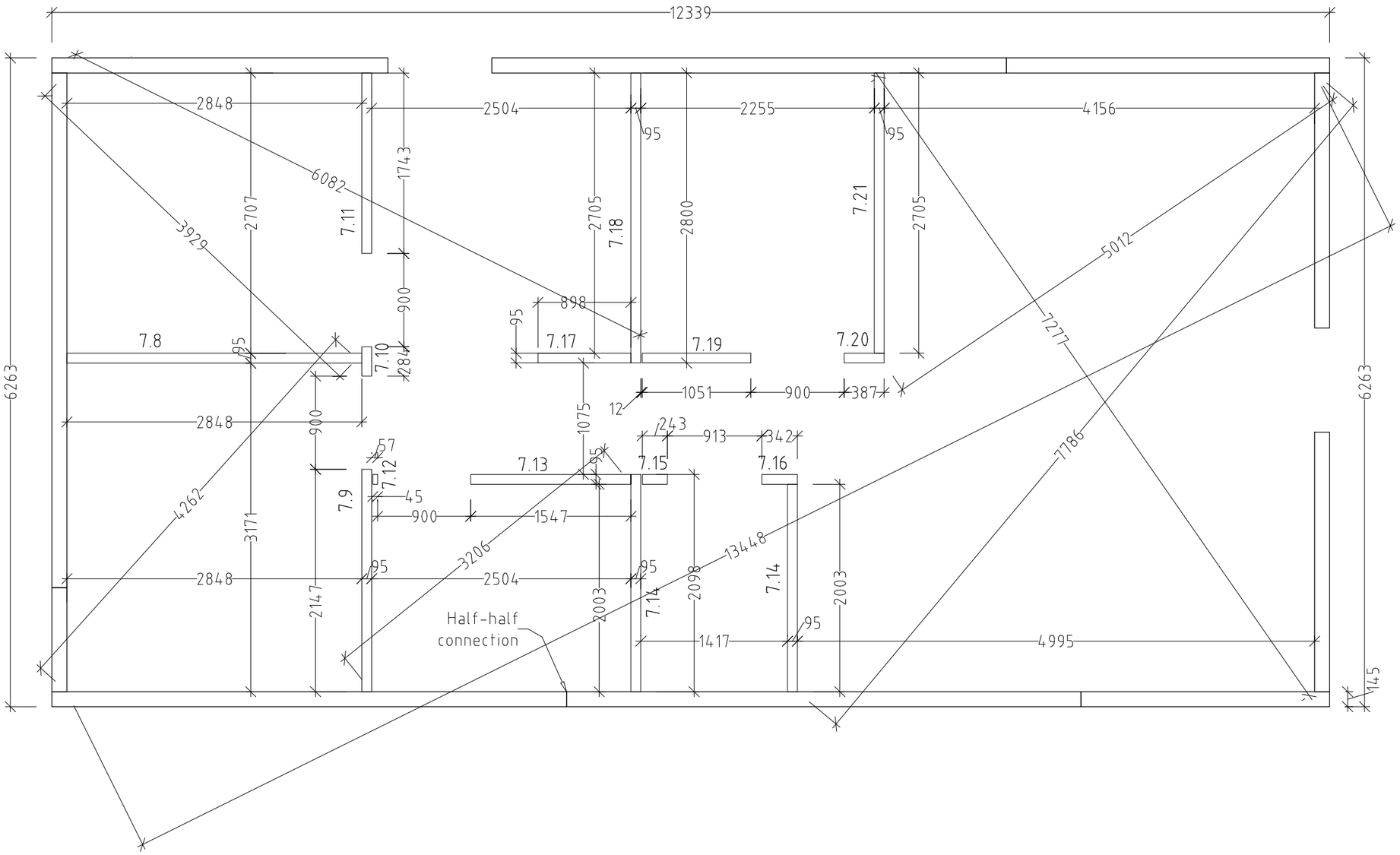

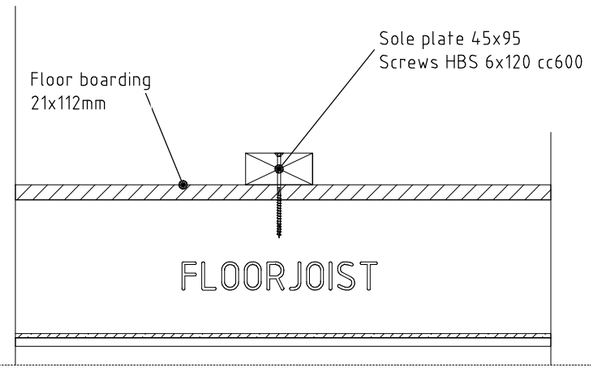

Notes:

1. Follow appropriate detail drawings to fasten elements.
2. Last board of every wall must be cut to correct width.
3. Installation plans and fastening materials are recommended by factory and are not mandatory.
4. Factory is not responsible for this project statics and stability.

IP117

Internal wall base betl plan 08.07.2022 M 1:25 / A3L

ID:000-2018; project:Klettar 80m2; designer: M.K ,Drawer: M.K

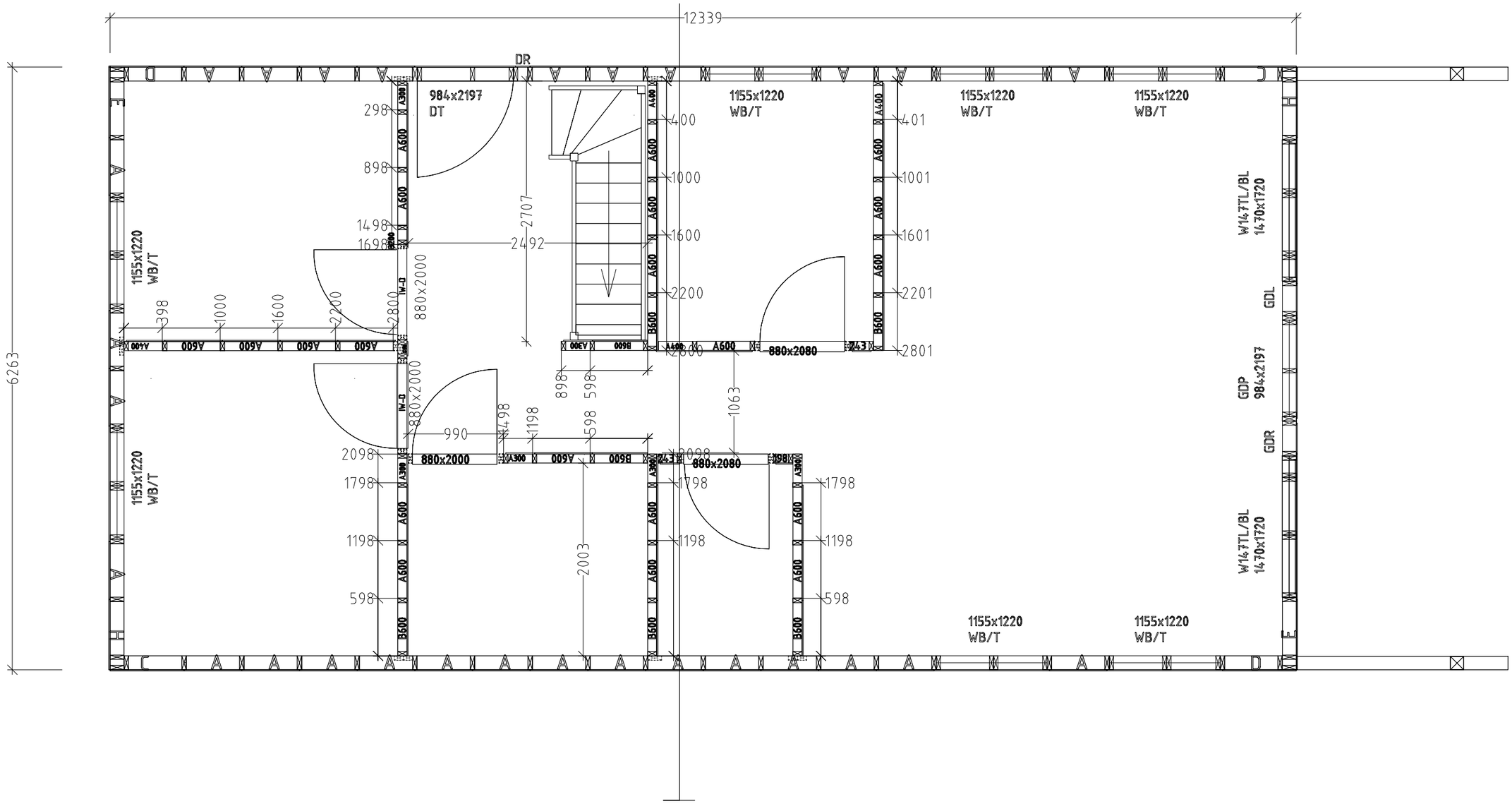

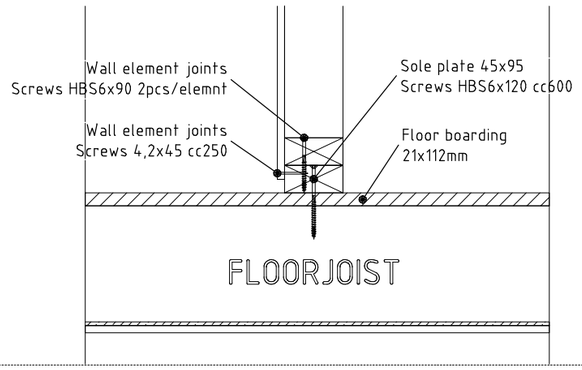

Notes:

1. Follow appropriate detail drawings to fasten elements.
2. Last board of every wall must be cut to correct width.
3. Installation plans and fastening materials are recommended by factory and are not mandatory.
4. Factory is not responsible for this project statics and stability.

IP118

Internal wall plan 08.07.2022 M 1:25 / A3L

ID:000-2018; project:Klettar 80m2; designer: M.K.;Drawer: M.K

IP119

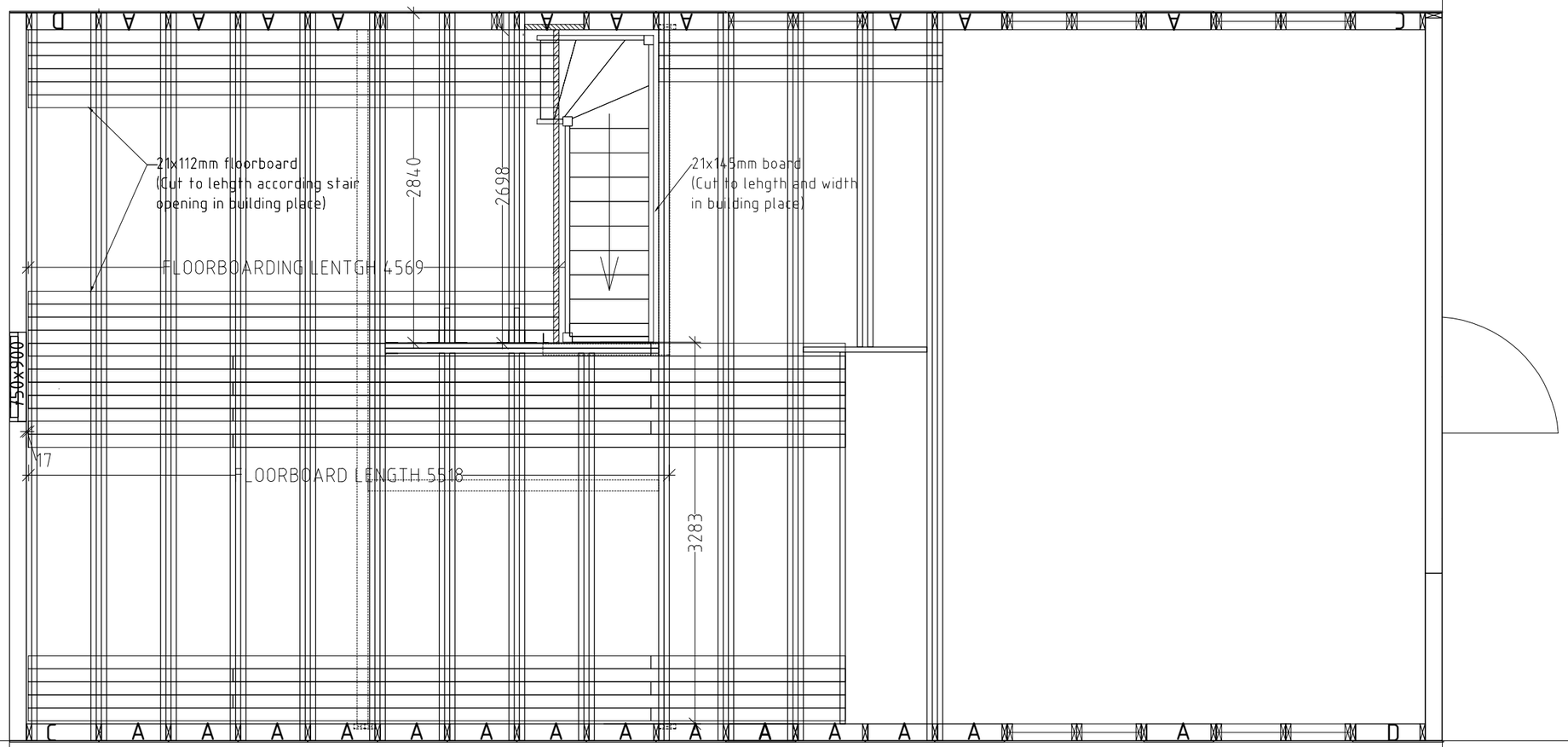

Board material amount is sent in meter amount
Board connection must be dispersed.
Board connection on the same bearing support is allowed over 2 boards

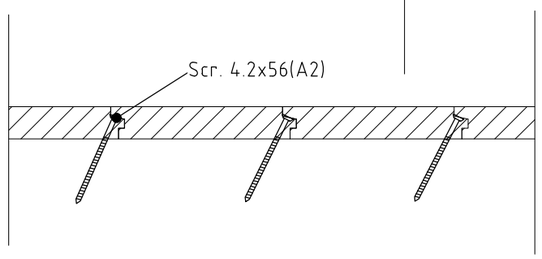

Notes:
1. Follow appropriate detail drawings to fasten elements.
2. Last board of every wall must be cut to correct width.
3. Installation plans and fastening materials are recommended by factory and are not mandatory.
4. Factory is not responsible for this project statics and stability.

Floorboarding plan II floor 08.07.2022 M 1:25 / A3L

ID:000-2018; project:Klettar 80m2; designer: M.K ,Drawer: M.K

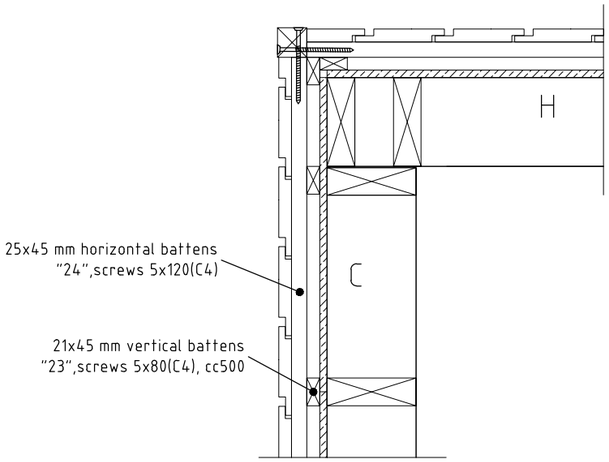

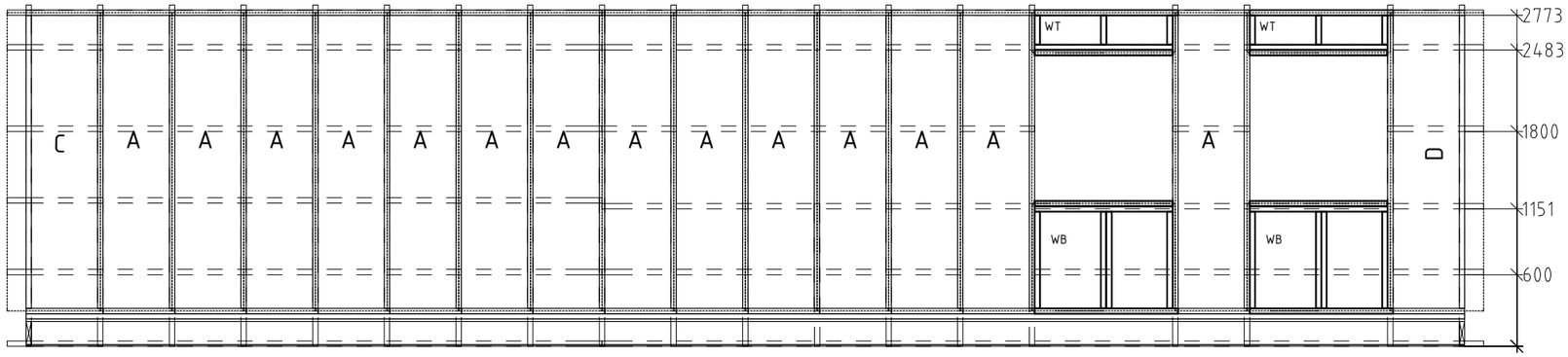

Vert. batten 21x45
Hor.batten 25x45

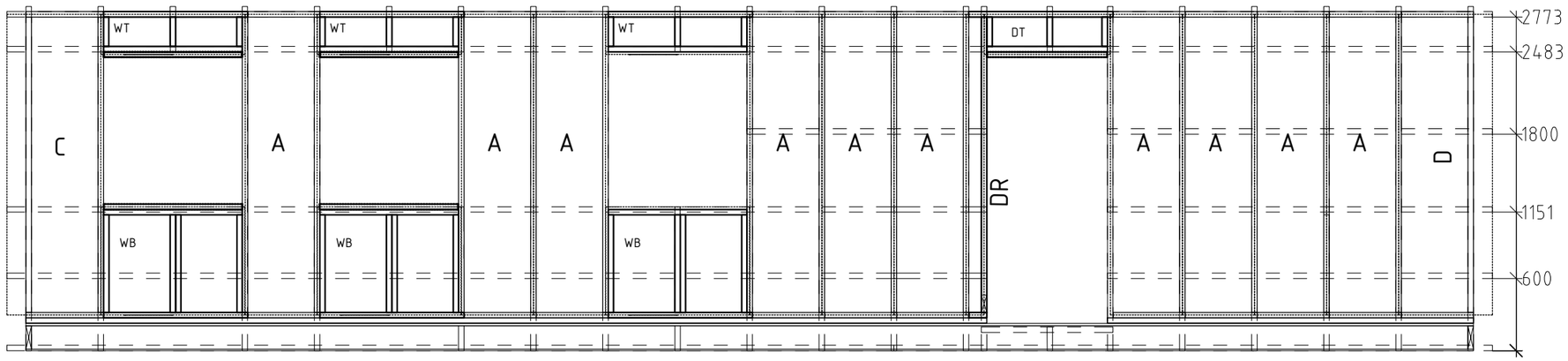

Vert. batten 21x45
Hor.batten 25x45

Notes:

1. Follow appropriate detail drawings to fasten elements.
2. Last board of every wall must be cut to correct width.
3. Installation plans and fastening materials are recommended by factory and are not mandatory.
4. Factory is not responsible for this project statics and stability.

IP120

External vertical and horizontal batten plan

08.07.2022 M 1:25 / A3L

ID:000-2018; project:Klettar 80m2; designer: M.K ;Drawer: M.K

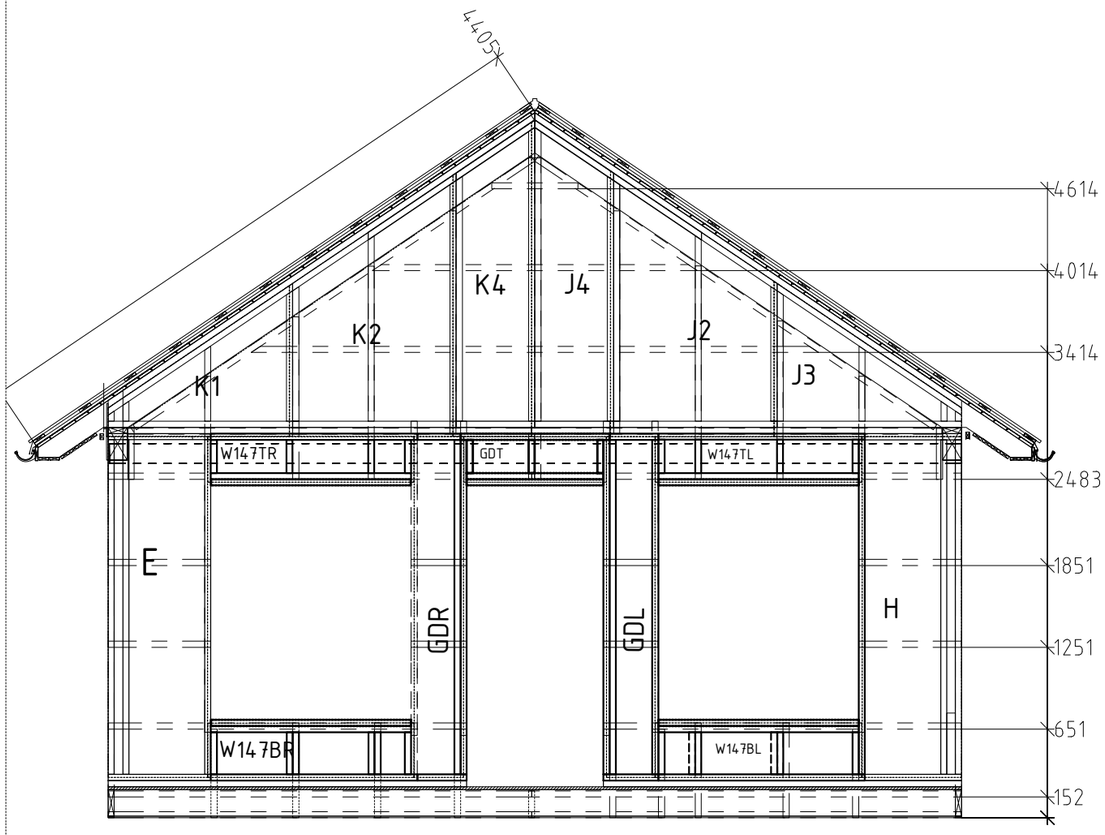

Vert. batten 21x45
Hor.batten 25x45

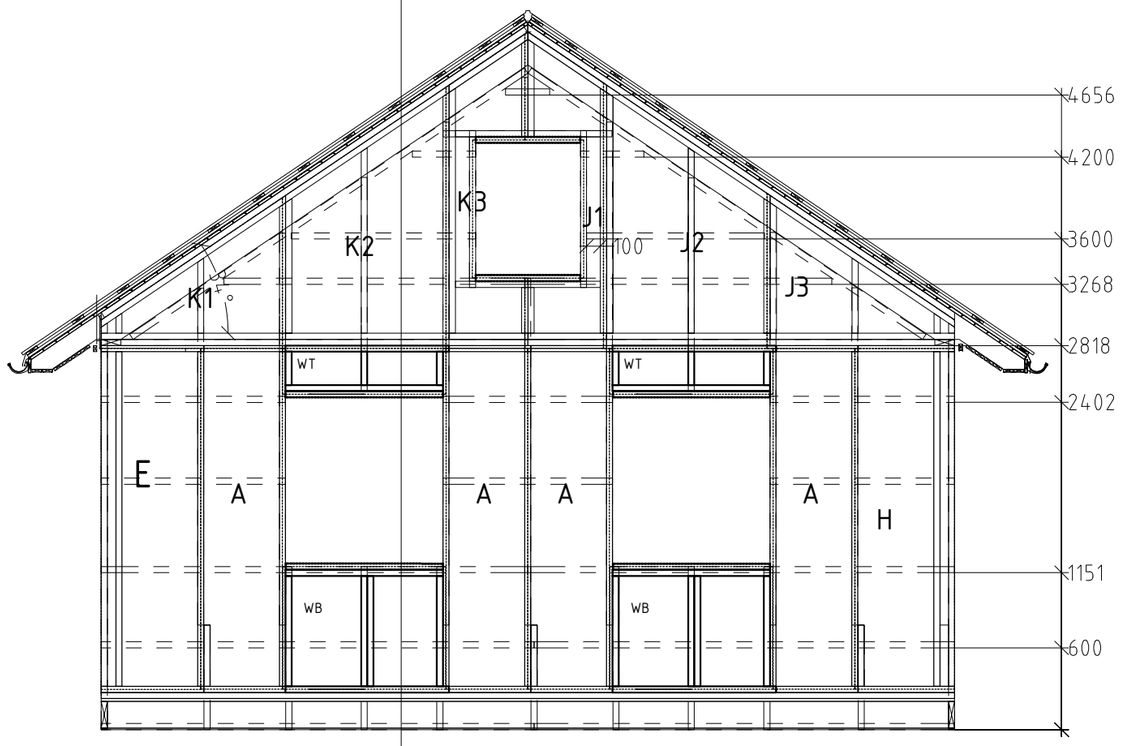

Vert. batten 21x45
Hor.batten 25x45

Notes:

1. Follow appropriate detail drawings to fasten elements.
2. Last board of every wall must be cut to correct width.
3. Installation plans and fastening materials are recommended by factory and are not mandatory.
4. Factory is not responsible for this project statics and stability.

IP121

External vertical and horizontal batten 08.07.2022 M 1:25 / A3L

ID:000-2018; project:Klettar 80m2; designer: M.K ,Drawer: M.K

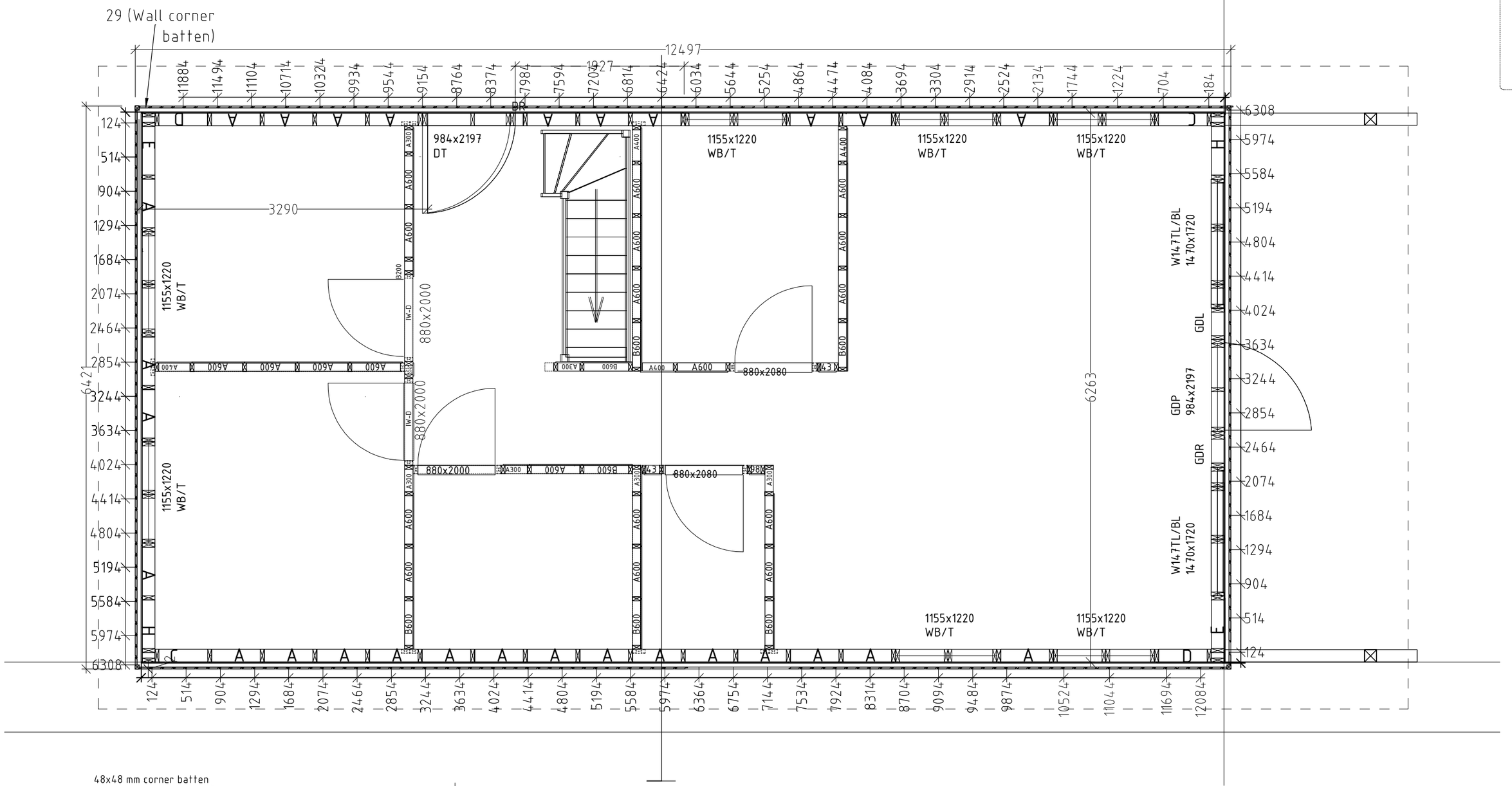

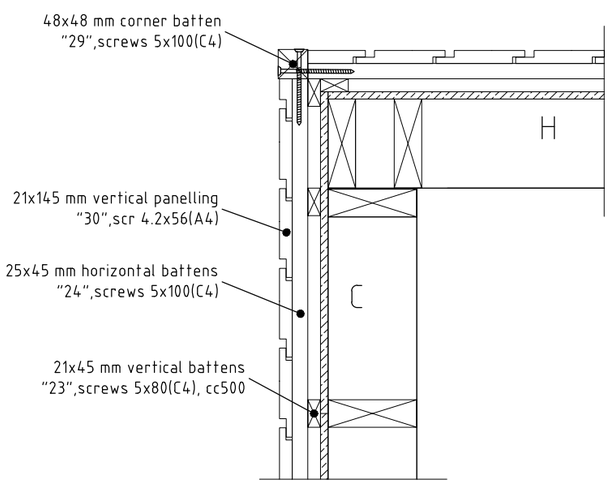

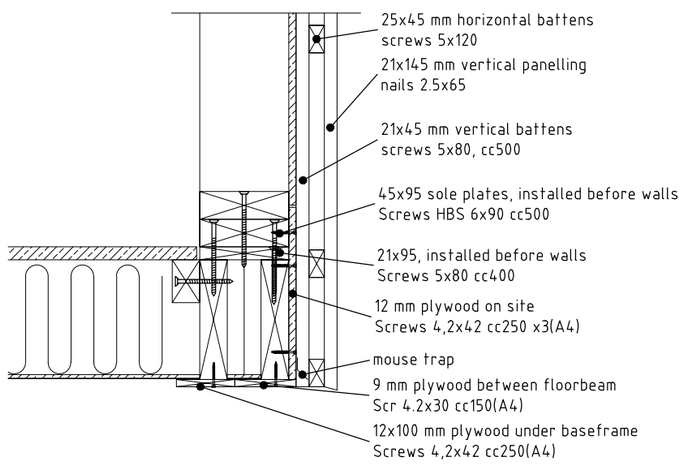

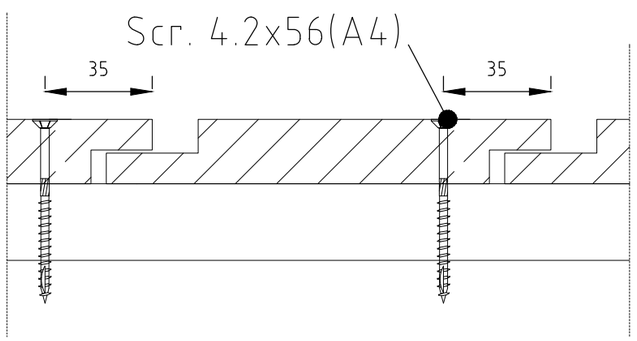

IP122

External cladding 08.07.2022 M 1:25 / A3L

ID:000-2018; project:Klettar 80m2; designer: M.K ;Drawer: M.K

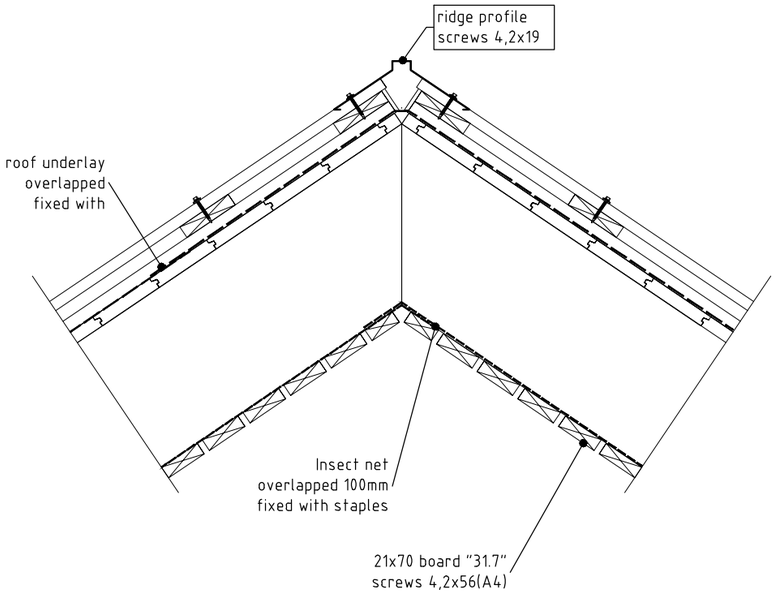

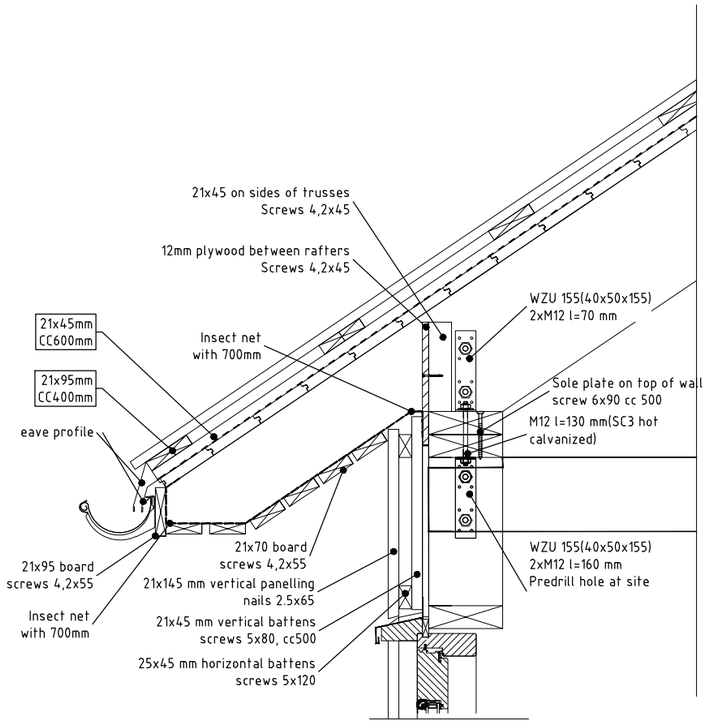

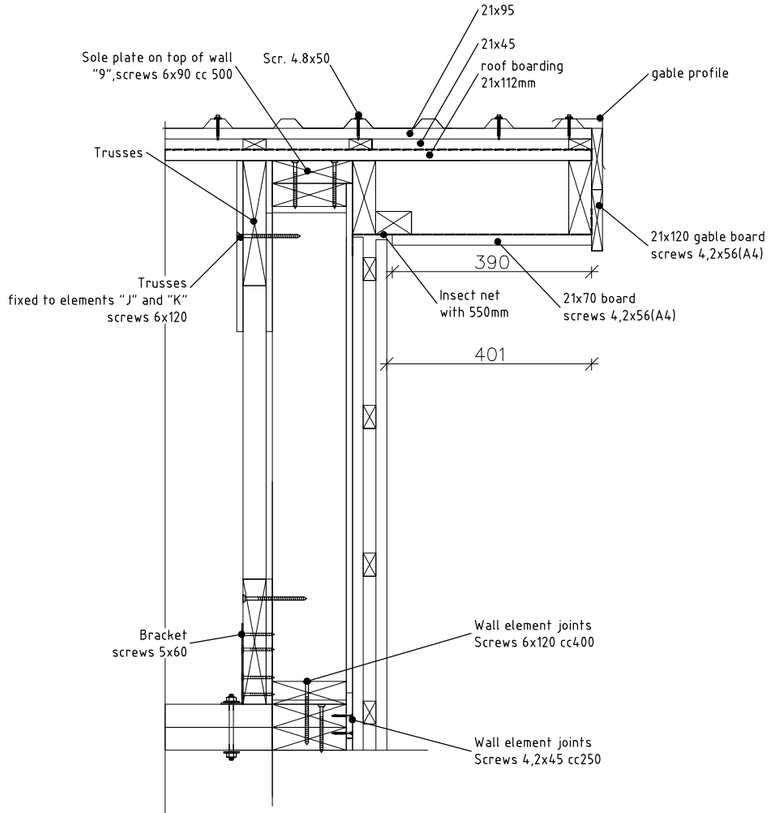

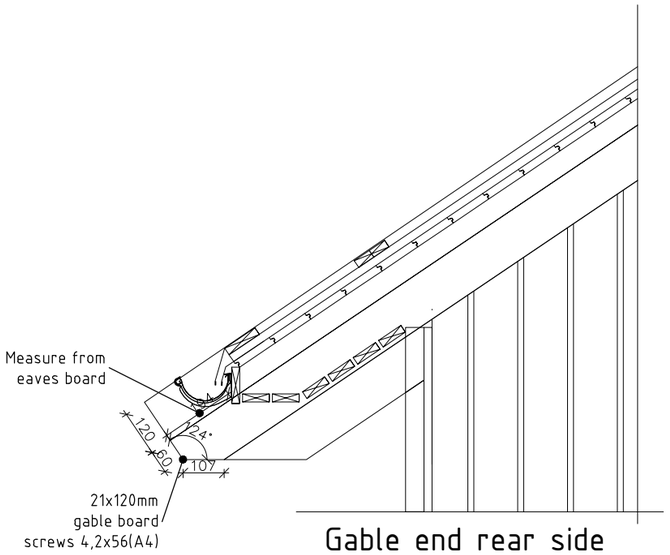

Gable end rear side

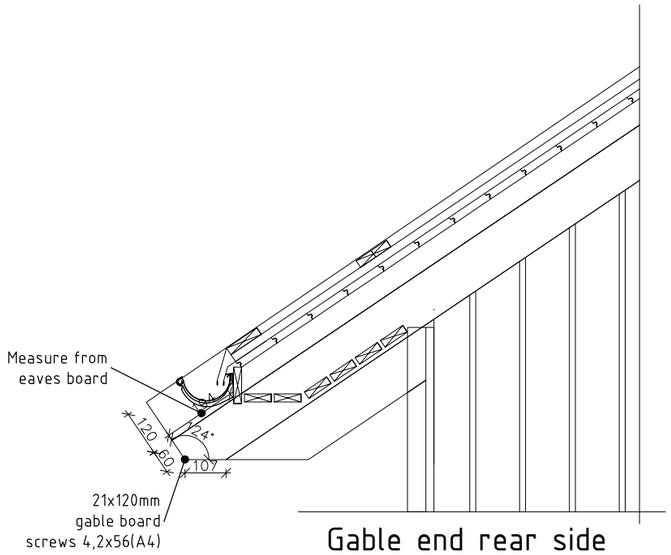

Gable end rear side

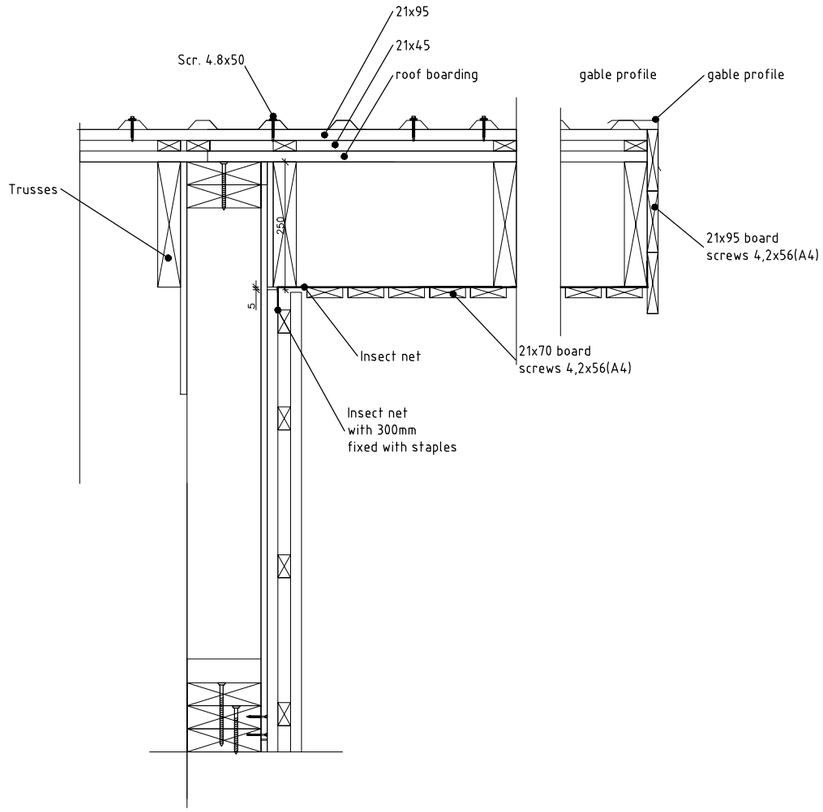

Notes:

1. Follow appropriate detail drawings to fasten elements.
2. Parapet steel profile installation order: corner profile and end profile, parapet profile.
3. Installation plans and fastening materials are recommended by factory and are not mandatory.
4. Factory is not responsible for this project statics and stability.

IP123

EAVES BOARDS

08.07.2022 M 1:50 / A3L

ID:000-2018; project:Klettar 80m2; designer: M.K ;Drawer: M.K

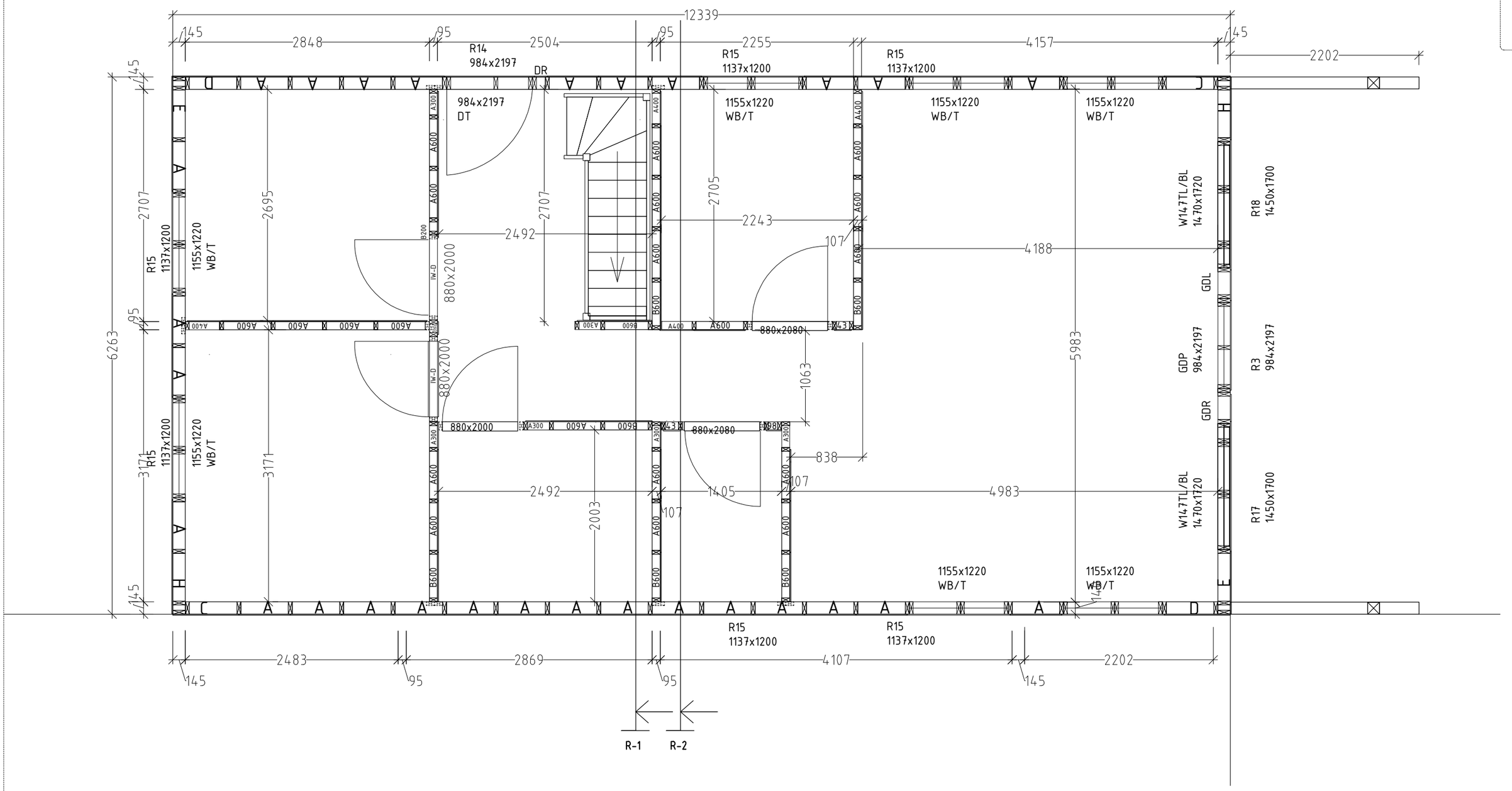

Notes:

1. Follow appropriate detail drawings to fasten elements.
2. Installation plans and fastening materials are recommended by factory and are not mandatory.
3. Factory is not responsible for this project statics and stability.

IP124

STAIR LOCATION 08.07.2022 M 1:25 / A3L

ID:000-2018; project:Klettar 80m2; designer: M.K ,Drawer: M.K

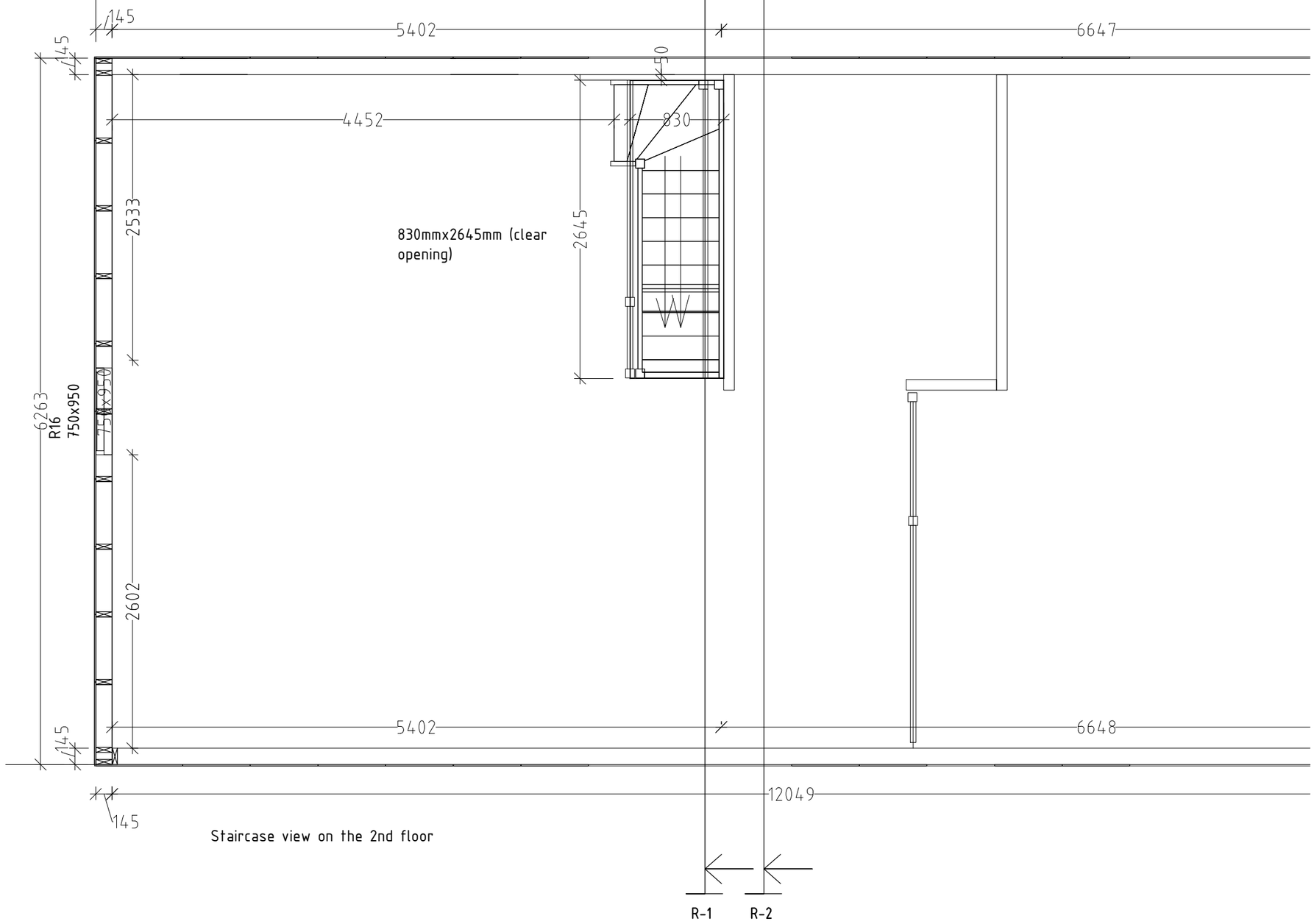

Staircase view on the 2nd floor

Notes:

1. Follow appropriate detail drawings to fasten elements.
2. Installation plans and fastening materials are recommended by factory and are not mandatory.
3. Factory is not responsible for this project statics and stability.

IP125

STAIR LOCATION on the 2nd floor 08.07.2022 M 1:25 / A3L

ID:000-2018; project:Klettar 80m2; designer: M.K ;Drawer: M.K

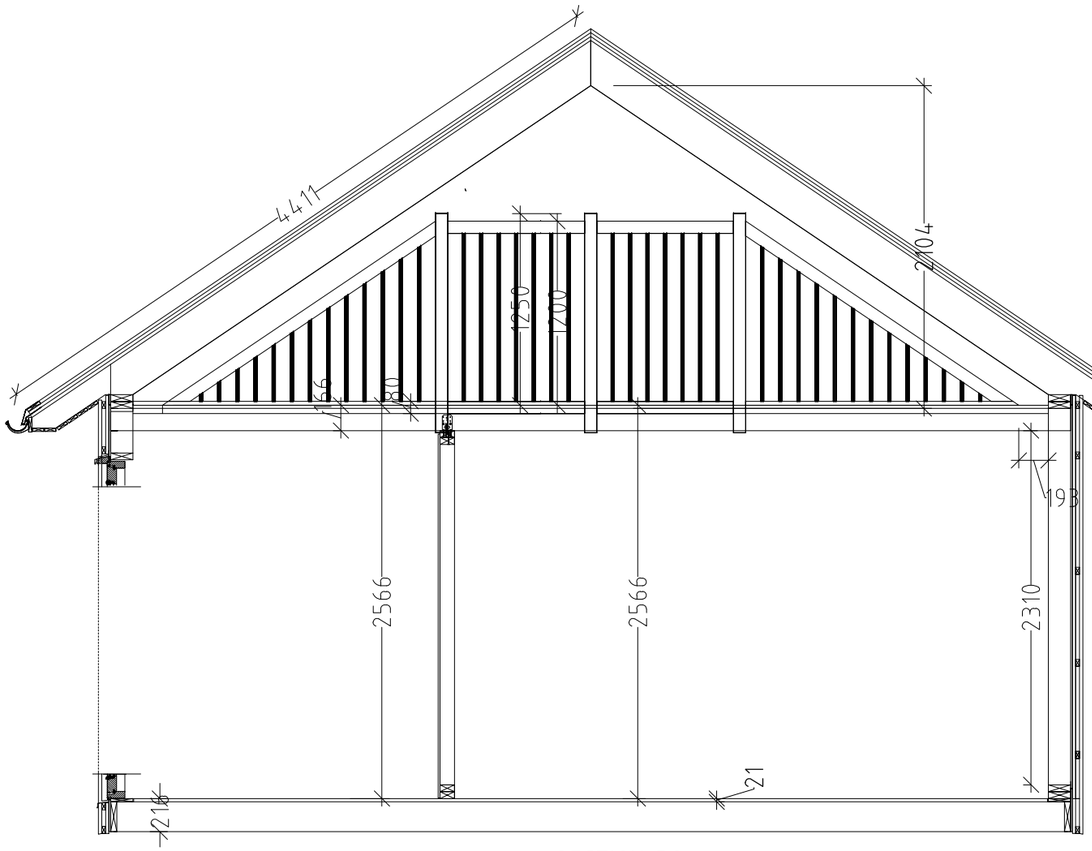

SECTION R2

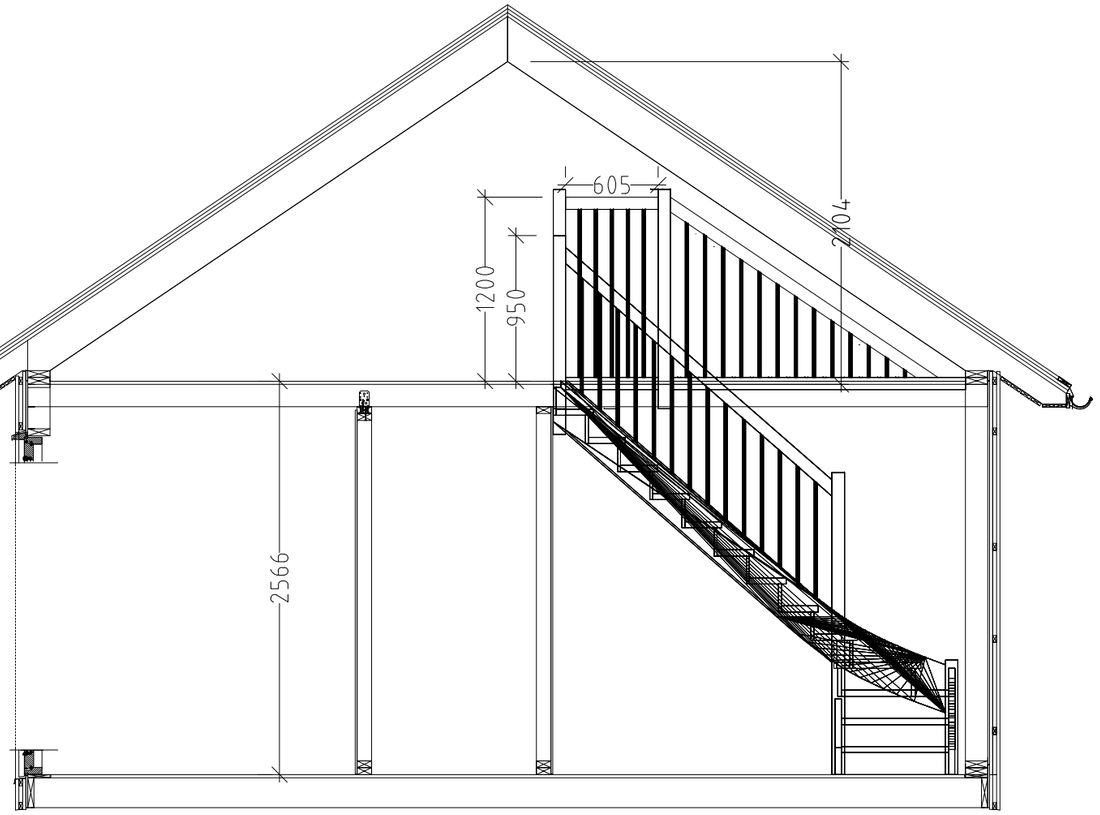

SECTION R1

Notes:

1. Follow appropriate detail drawings to fasten elements.
2. Installation plans and fastening materials are recommended by factory and are not mandatory.
3. Factory is not responsible for this project statics and stability.

IP126

Inside view SECTION R1; R2 08.07.2022 M 1:25 / A3L

ID:000-2018; project:Klettar 80m2; designer: M.K ,Drawer: M.K

Eave profile on top of eave

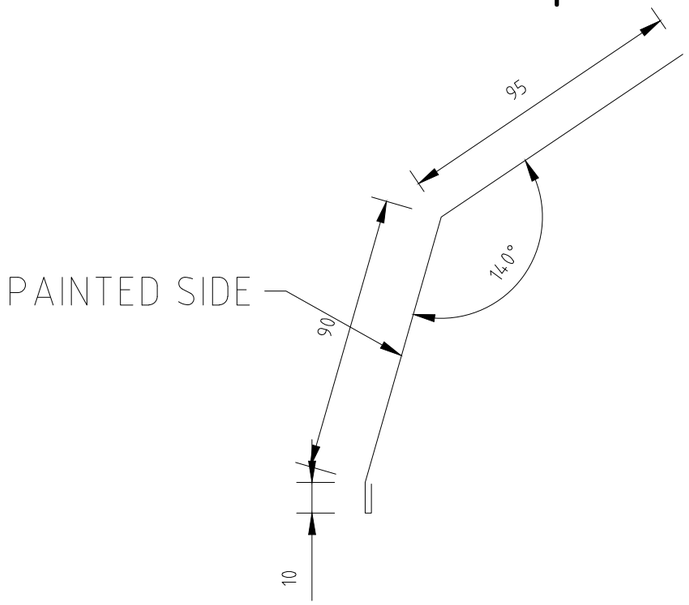

Eave profile below of eave

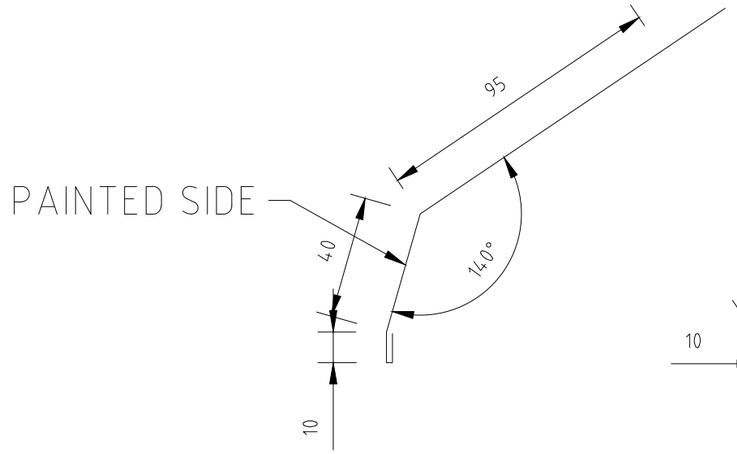

Ridge profile

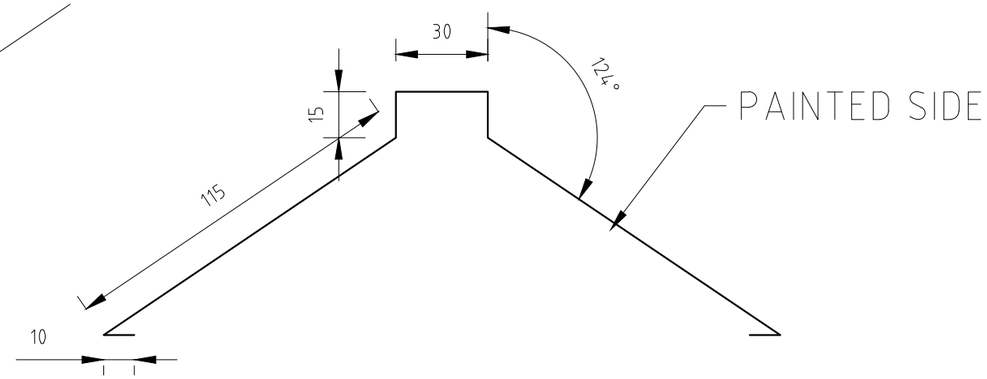

Door&window top sill profile

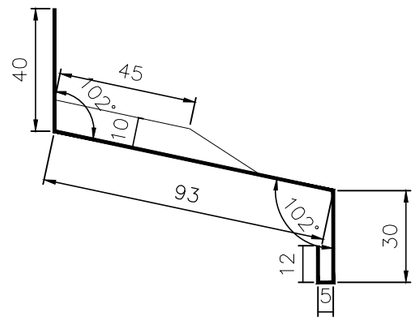

Gable profile

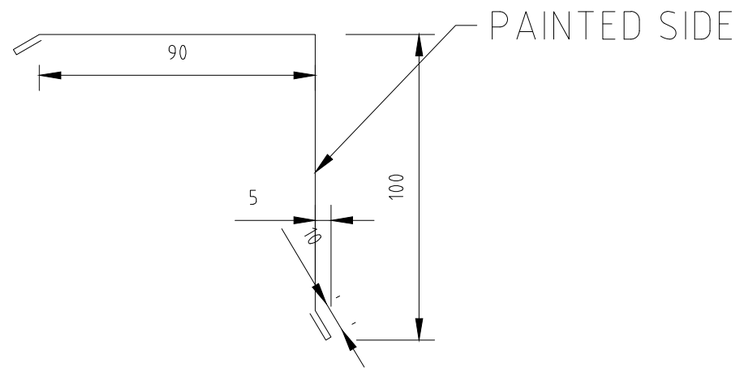

Door&window low sill profile

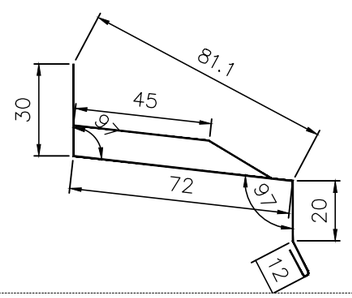

Notes:

1. Follow appropriate detail drawings to fasten elements.
2. Installation plans and fastening materials are recommended by factory and are not mandatory.
3. Factory is not responsible for this project statics and stability.

IP127

PROFILES 08.07.2022 M 1:25 / A3L

ID:000-2018; project:Klettar 80m2; designer: M.K ,Drawer: M.K

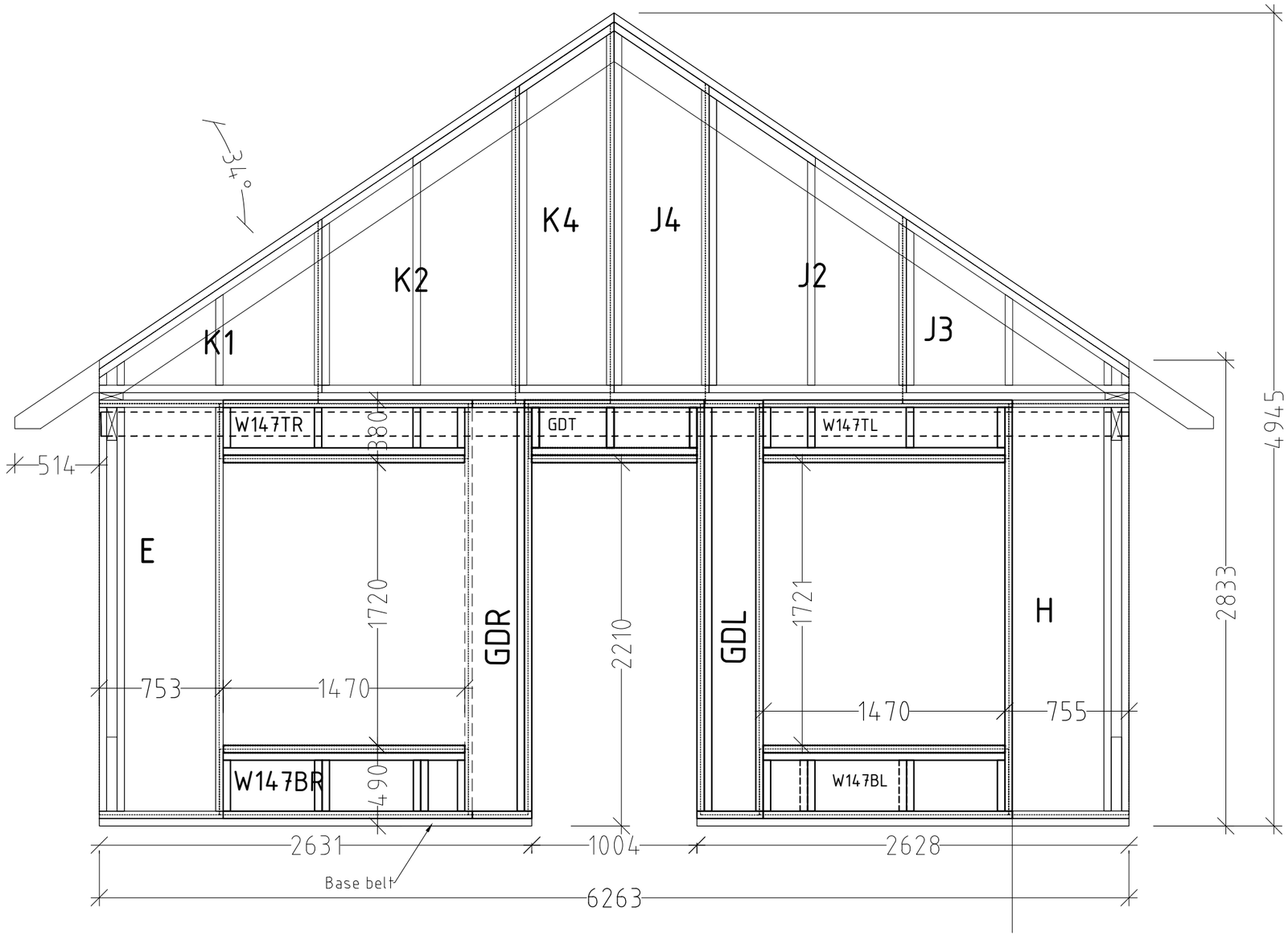

Notes:

1. Follow appropriate detail drawings to fasten elements.
2. Installation plans and fastening materials are recommended by factory and are not mandatory.
3. Factory is not responsible for this project statics and stability.

IP128

FRONT WALL ELEMENT VIEW 08.07.2022 M 1:25 / A3L

ID:000-2018; project:Klettar 80m2; designer: M.K ;Drawer: M.K

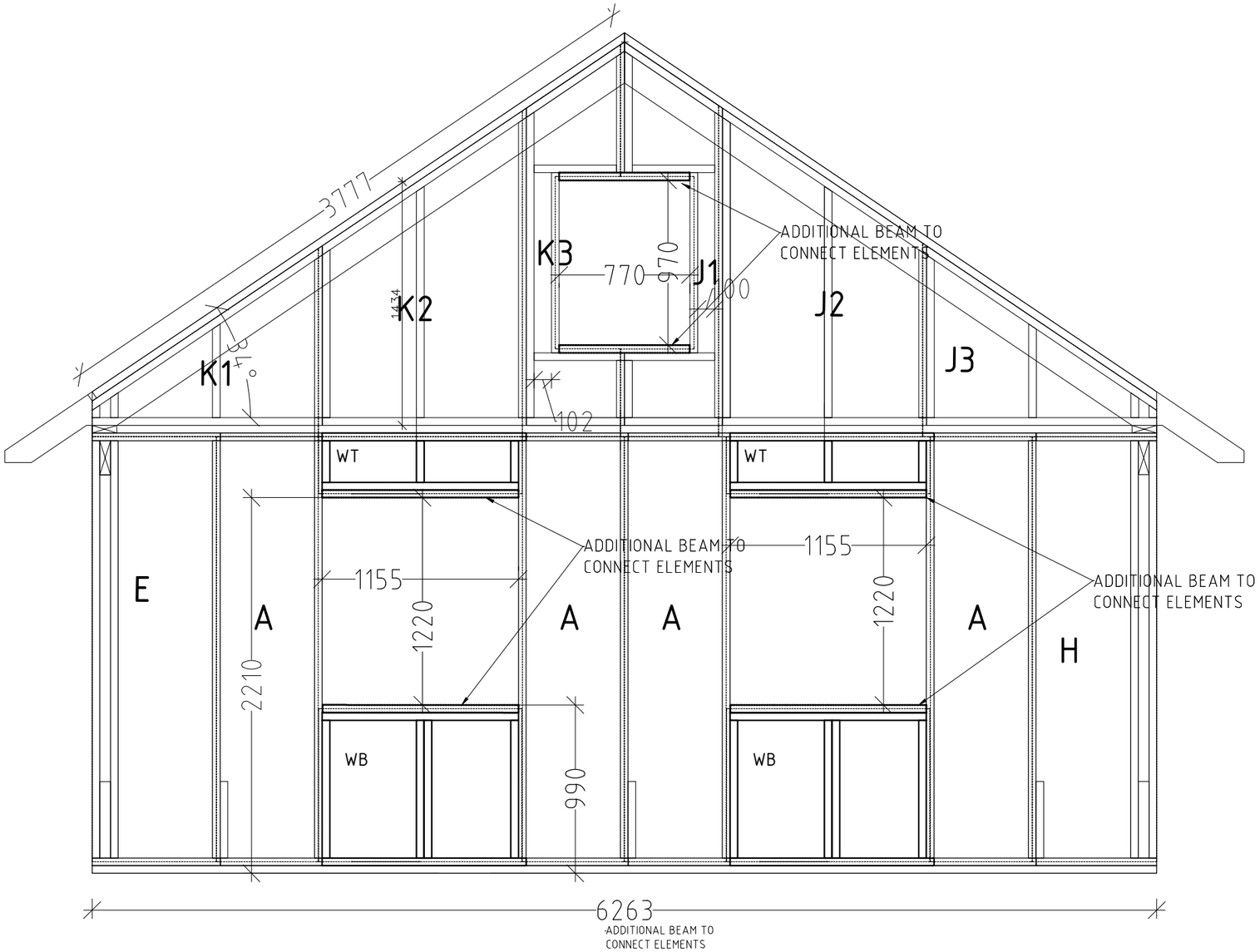

Notes:

1. Follow appropriate detail drawings to fasten elements.
2. Installation plans and fastening materials are recommended by factory and are not mandatory.
3. Factory is not responsible for this project statics and stability.

IP129

REAR WALL ELEMENT VIEW 08.07.2022 M 1:25 / A3L

ID:000-2018; project:Klettar 80m2; designer: M.K ;Drawer: M.K

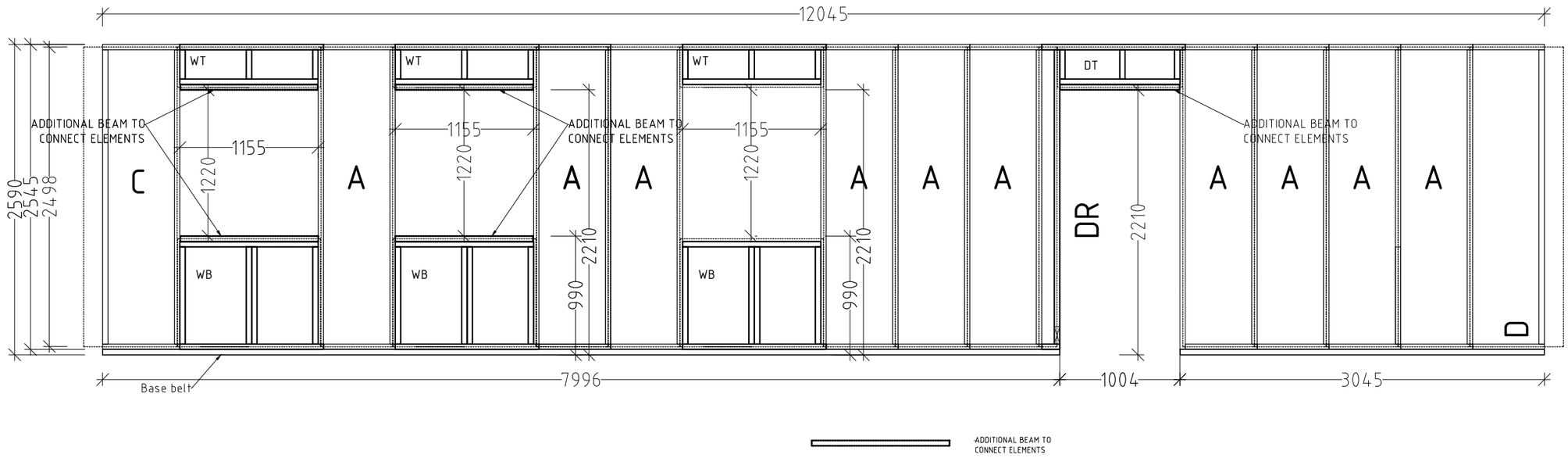

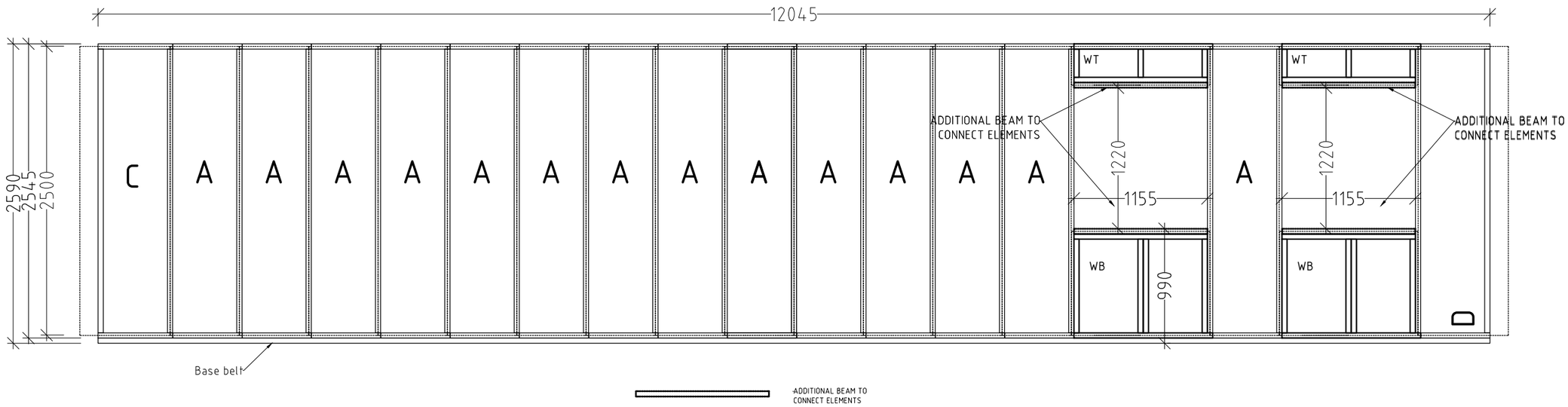

Notes:

1. Follow appropriate detail drawings to fasten elements.
2. Installation plans and fastening materials are recommended by factory and are not mandatory.
3. Factory is not responsible for this project statics and stability.

IP130

SIDE WALLS ELEMENT VIEW

08.07.2022 M 1:25 / A3L

ID:000-2018; project:Klettar 80m2; designer: M.K ;Drawer: M.K

Roof metal cover principal connection scheme:
Scr. 4.8x50
I: Every second high point cc.400 mm
J: Every high point cc200
K: Every high pint cc400

IP131

Roof cover connection principal scheme

08.07.2022 M 1:50 / A3L

ID:000-2018; project:Klettar 80m2; designer: M.K ,Drawer: M.K

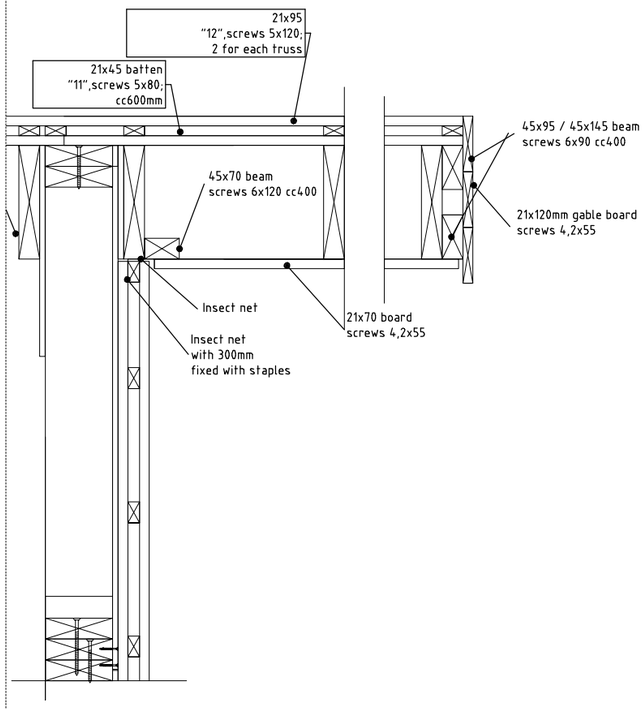

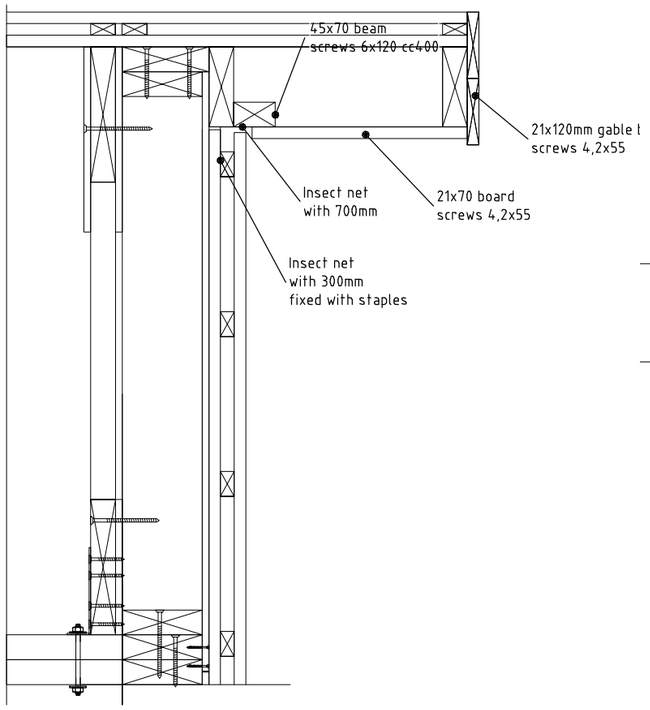

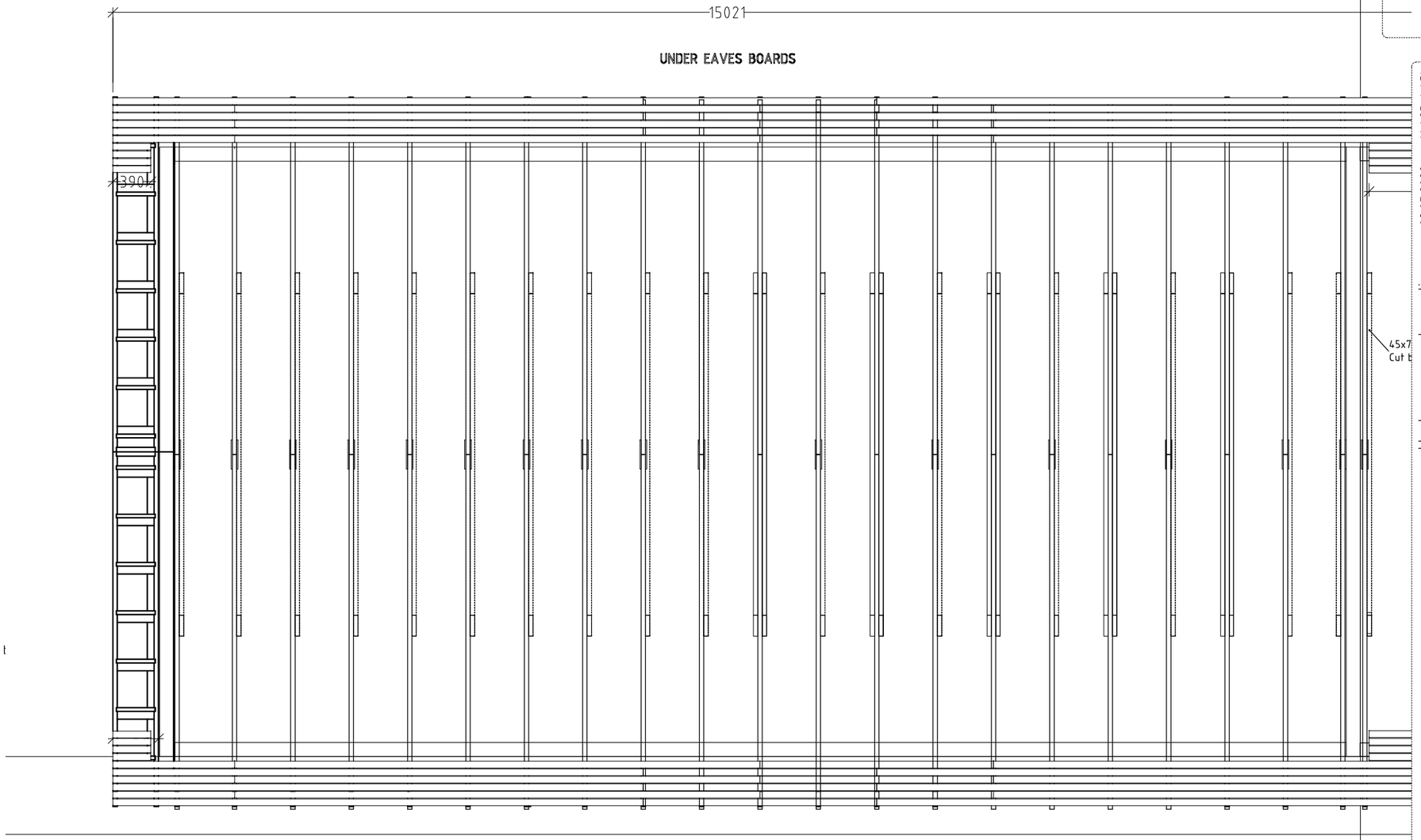

Measurements 390mm and 2112 mm are in exact measure.
All other board material is sent in meter amount
Board connection must be dispersed.
Board connection on the same bearing support is allowed over 2 boards

Notes:

1. Follow appropriate detail drawings to fasten elements.
2. Installation plans and fastening materials are recommended by factory and are not mandatory.
3. Factory is not responsible for this project statics and stability.

IP132

Under eaves boarding

M 1:25 / A3L

08.07.2022

ID:000-2018; project:Klettar 80m2; designer: M.K ,Drawer: M.K

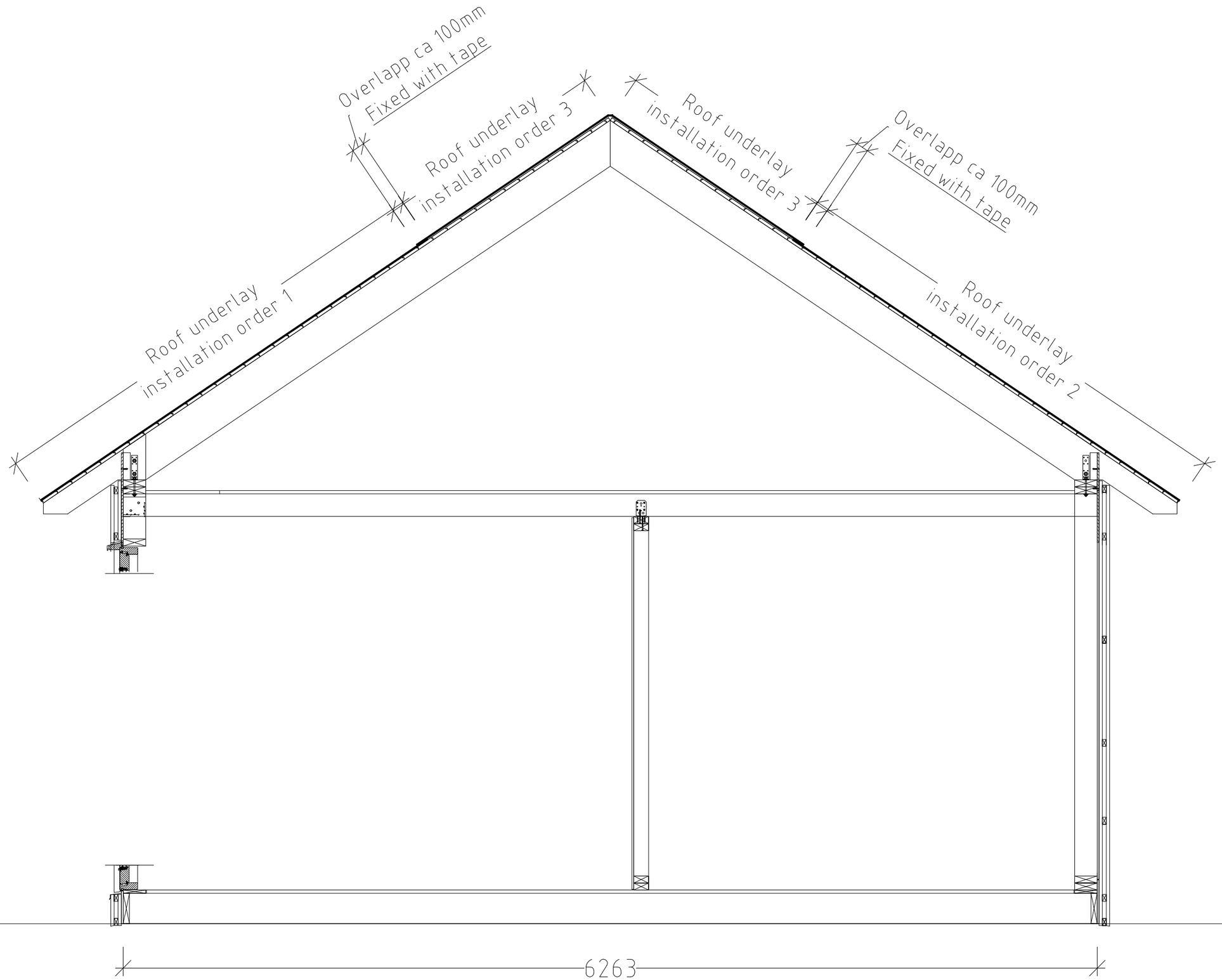

Notes:

1. Follow appropriate detail drawings to fasten elements.
2. Installation plans and fastening materials are recommended by factory and are not mandatory.
3. Factory is not responsible for this project statics and stability.

IP133

Roof underlay installation order 08.07.2022 M 1:25 / A3L

ID:000-2018; project:Klettar 80m2; designer: M.K ;Drawer: M.K

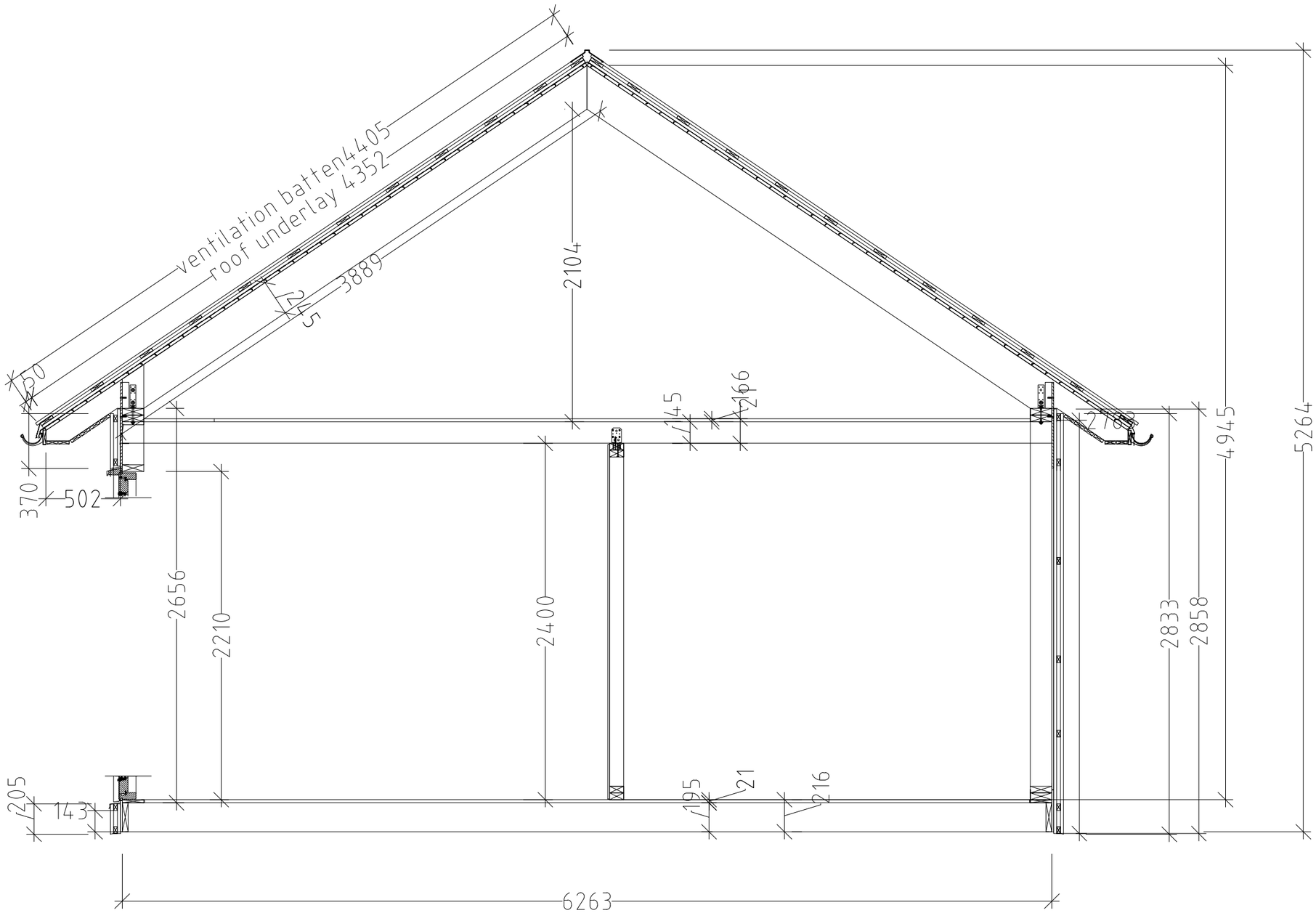

Notes:

1. Follow appropriate detail drawings to fasten elements.
2. Installation plans and fastening materials are recommended by factory and are not mandatory.
3. Factory is not responsible for this project statics and stability.

IP134

Roof detail profiles 08.07.2022 M 1:25 / A3L

ID:000-2018; project:Klettar 80m2; designer: M.K ,Drawer: M.K

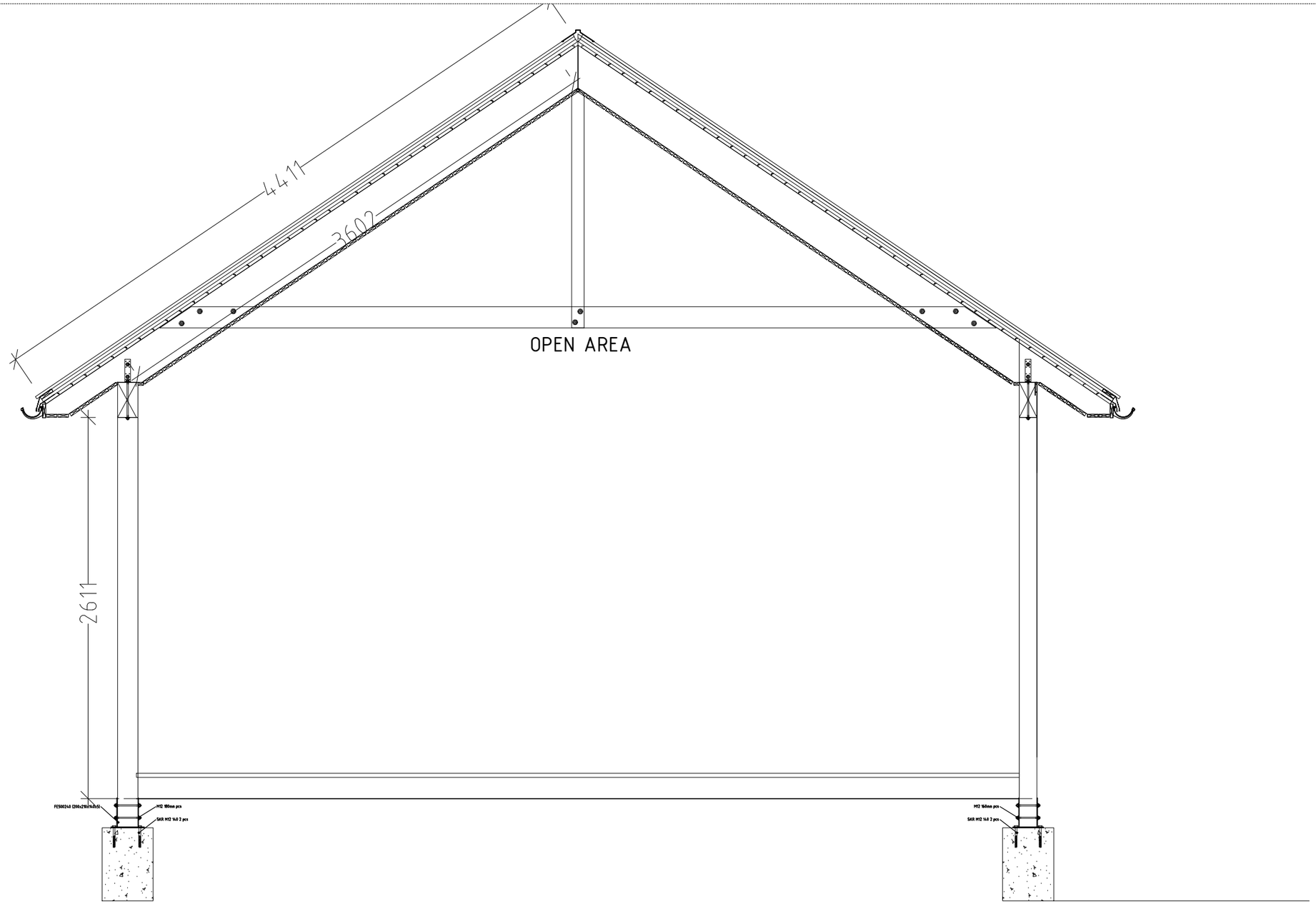

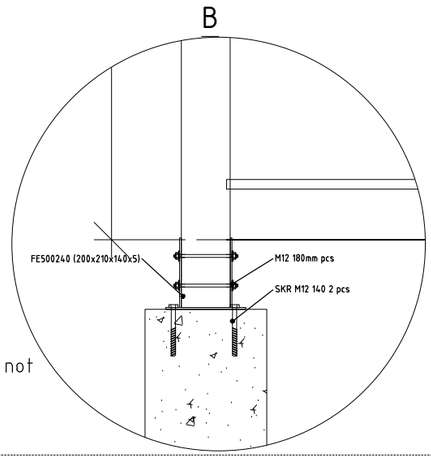

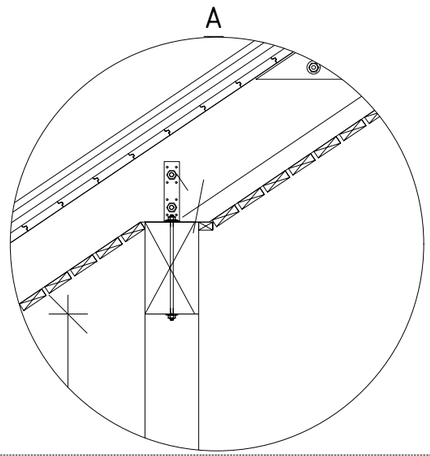

Notes:

1. Follow appropriate detail drawings to fasten elements.
2. Installation plans and fastening materials are recommended by factory and are not mandatory.
3. Factory is not responsible for this project statics and stability.

IP135

Roof detail profiles 08.07.2022 M 1:25 / A3L

ID:000-2018; project:Klettar 80m2; designer: M.K ,Drawer: M.K

DET B5

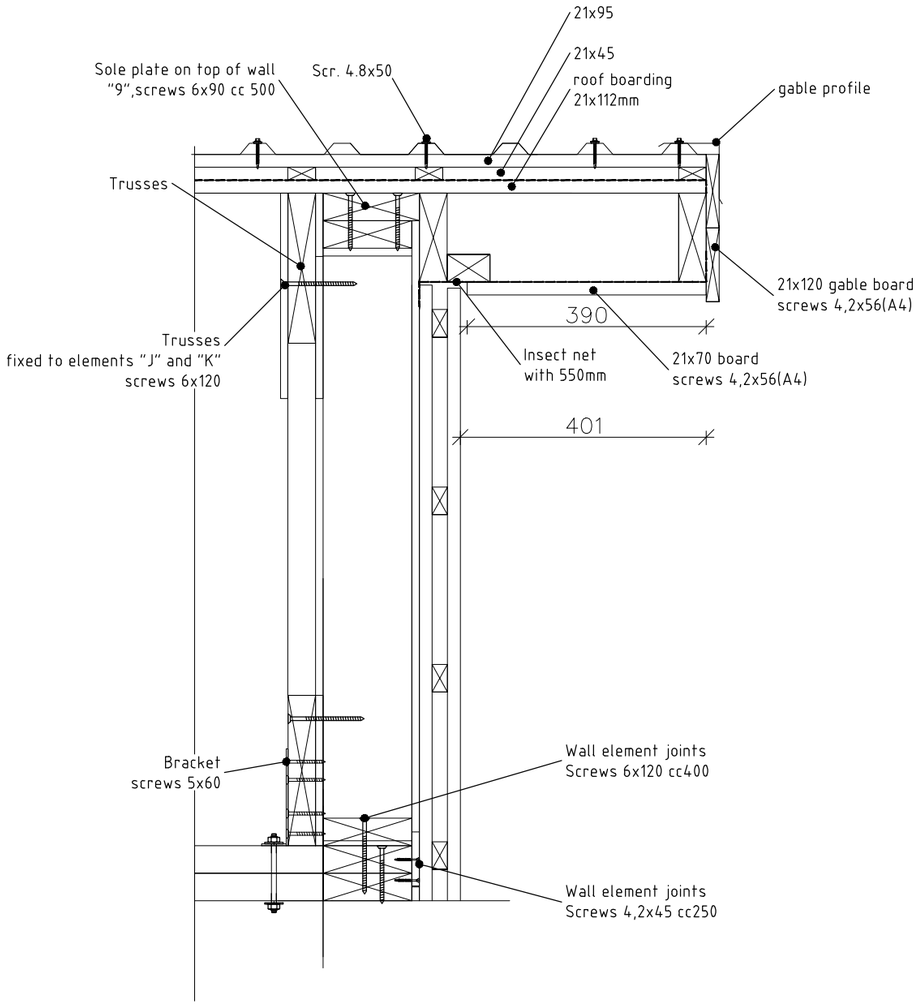

Notes:

1. Follow appropriate detail drawings to fasten elements.
2. Installation plans and fastening materials are recommended by factory and are not mandatory.
3. Factory is not responsible for this project statics and stability.

SOFFIT ELEMENT 08.07.2022 M 1:25 / A3L

ID:000-2018; project:Klettar 80m2; designer: M.K ,Drawer: M.K

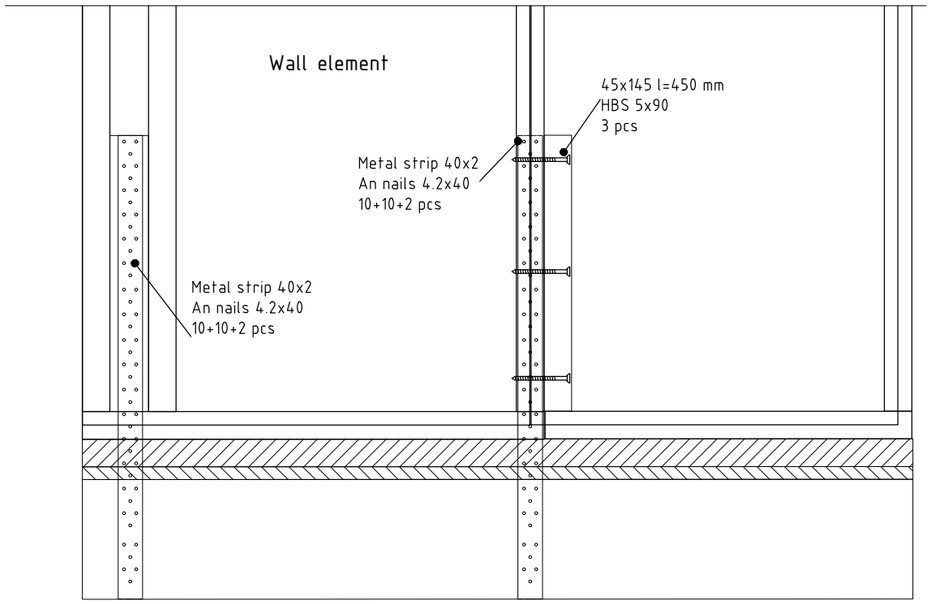

Notes:
1. Follow appropriate detail drawings to fasten elements.
2. Installation plans and fastening materials are recommended by factory and are not mandatory.
3. Factory is not responsible for this project statics and stability.

DET B6

Cable wall extra connection 08.07.2022 M 1:25 / A3L

ID:000-2018; project:Klettar 80m2; designer: M.K ;Drawer: M.K

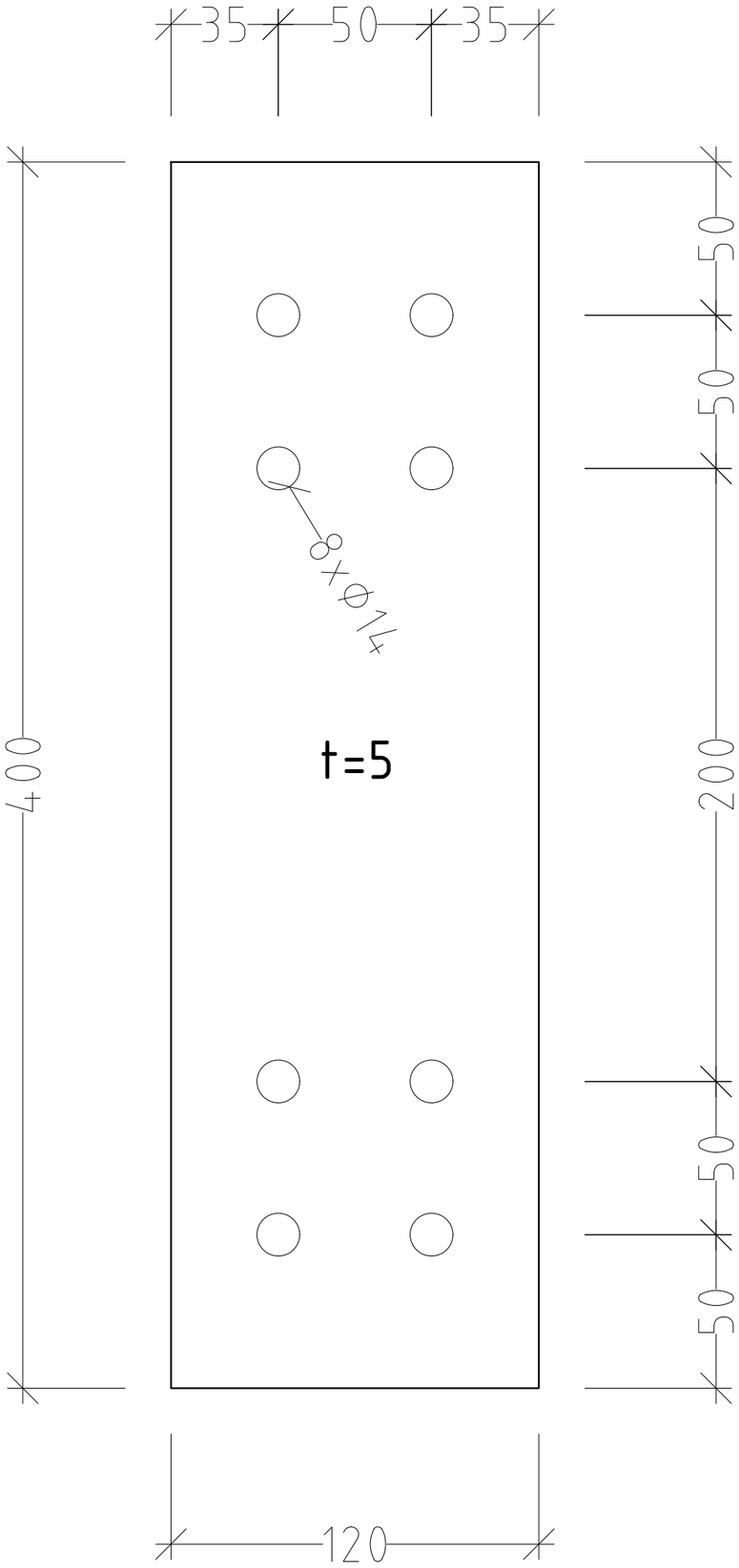

Metal plate MP1 120x400
4 tk
Hot galvanized

Notes:
1. Follow appropriate detail drawings to fasten elements.
2. Installation plans and fastening materials are recommended by factory and are not mandatory.
3. Factory is not responsible for this project statics and stability.

Metal plate

Metal plate 08.07.2022 M 1:2 / A3L

ID:000-2018; project:Kletttar 80m2; designer: M.K ;Drawer: M.K